KOHLER.

SYSTEM BASIC 6030

ACRYLIC BATH

K-1102-S

FEATURES

- *60” x 30” x 16-1/8”*
- *Acrylic*
- *Molded lumbar supports and armrests*

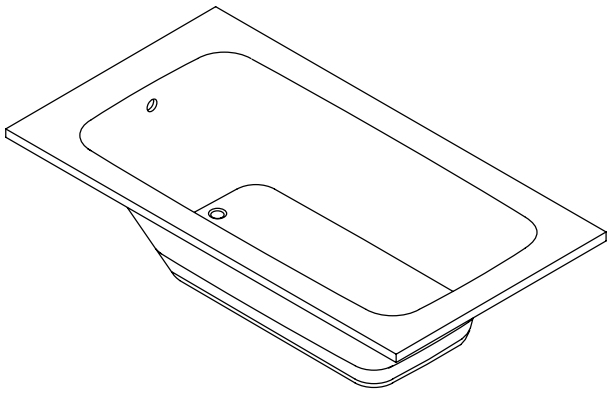

CODES/STANDARDS APPLICABLE

Specified model meets or exceeds the following:

- *ANSI Z124.1*
- *IAPMO/UPC*
- *State of Massachusetts*

COLORS/FINISHES

- 0 White
- Other Refer to Fixtures Price Book for additional colors

Accessories:

- CP Polished Chrome

SPECIFIED MODEL:

Model	Description	Colors/Finishes	
K-1102-S	60” x 30” bath	☐0 White	☐Other_____

Recommended Accessories		
K-11666	Drain	☐CP
Optional Accessories		
K-1179	Vinyl tiling-in bead (use when wall material contacts any top surface of bath)	☐NA

PRODUCT SPECIFICATION:

The bath shall be 60” in length, 30” in width, and 16-1/8” in height. Bath shall be made of acrylic. Bath shall have molded lumbar supports and armrests. Bath shall be Kohler Model K-1102-S-_____.

We reserve the right to make revisions without notice in the design of fixtures or in packaging unless this right has specifically been waived at the time the order is accepted.

SYSTEM BASIC 6030

PRODUCT INFORMATION

Fixture*:	basin area	top area	weight
Bathing well	44” x 16”	52” x 23”	40 lbs.
	water depth	capacity	
To overflow	12”	38 gal.	
* Approximate measurements for comparison only.			

Roughing-In Notes	
No change in measurements if connected with drain illustrated.	
Cut-out	58-1/2” x 28-1/2”

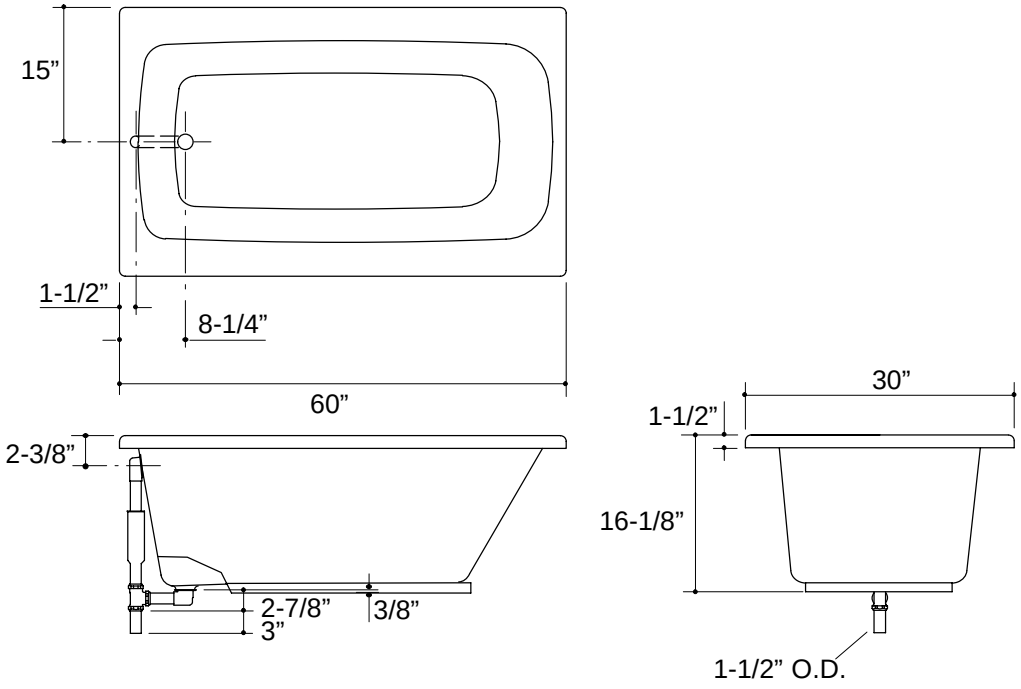

1.25>132

PRODUCT DIAGRAM