KOHLER®

INSTALLATION INSTRUCTIONS

安装说明书

Shower Arm

花洒臂

11623T 16347T 15398T 顶装式花洒臂
16346T 15397T 墙装式花洒臂

安装之前

所有的资料是按最新出版的产品资料编写而成。科勒公司保留任何时候不经通知即可改变产品特性、包装或产品可供类型的权利。

说明书包括重要的安装、保养及清洁方面的内容，请把这些资料交给用户阅读。

注意事项：
1. 切断供水管路。
2. 遵守所有当地管路安装及建筑条例。

BEFORE YOU BEGIN

All information is based on the latest product information available at the time of publication. Kohler Co. reserves the right to make changes in product characteristics, packaging, or availability at any time without notice.

Please leave these instructions for the consumer. They contain important information.

NOTES:
1. Shut off the water supplies to the fitting.
2. Observe all local plumbing and building codes.

安装尺寸

ROUGH-IN DIMENSIONS

16346T

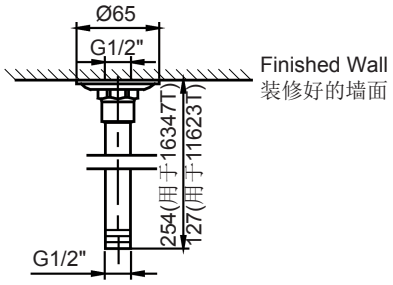

11623T 16347T

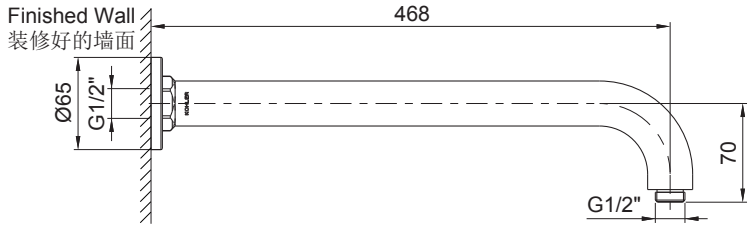

15397T

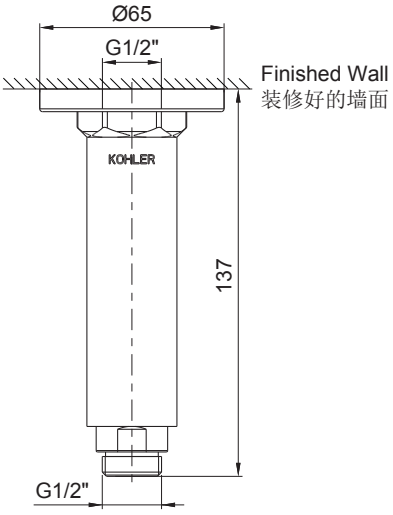

15398T

安装步骤

INSTALLATION

将G1/2″接管(1，客户自备)装到出水管上，接管露出墙外的长度应为10~14毫米。在装饰盖背面涂一圈油灰。在接口螺纹上缠绕足以密封的密封胶带或涂适合的密封胶，再将花洒臂(2)旋入接头，用带状扳手将花洒臂拧紧。调节装饰盖(3)，使其靠墙贴紧。去除多余油灰。

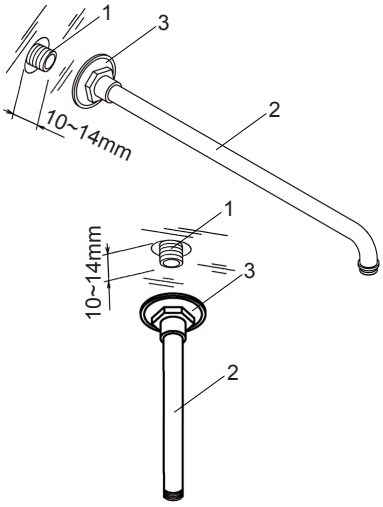

Install the G1/2″ nipple(1, not provided) to the pipe so it extends 10~14mm beyond the finished wall. Apply a ring of plumbers putty around the back surface of the escutcheon(3). Apply tape or thread sealant to the nipple threads, and install the shower arm(2), tighten with a strap wrench. Adjust the escutcheon and make sure it against the wall. Remove any excess putty.

打开水源，冲水约为一分钟以清除杂质。

Flush both water supplies through the shower arm for one minute to remove debris.

清洗说明

CLEANING INSTRUCTIONS

适用于所有加工处理过的表面：以中性肥皂水清洗镀层表面，再以干净的软布彻底擦干整个表面，许多清洁剂，比如氨水、去污粉及洁厕灵等，会对电镀表面造成伤害，切忌使用。

All Finishes: Clean the finish with mild soap and warm water. Wipe entire surface completely dry with clean soft cloth. Many cleaners may contain chemicals, such as ammonia, chlorine, toilet cleaner etc. which could adversely affect the finish and are not recommended for cleaning.

有磨损性的清洁用具或清洁剂也不可使用于科勒牌的水龙头及其配件上。

Do not use abrasive cleaners or solvents on Kohler faucets and fittings.

零件图

SERVICE PARTS

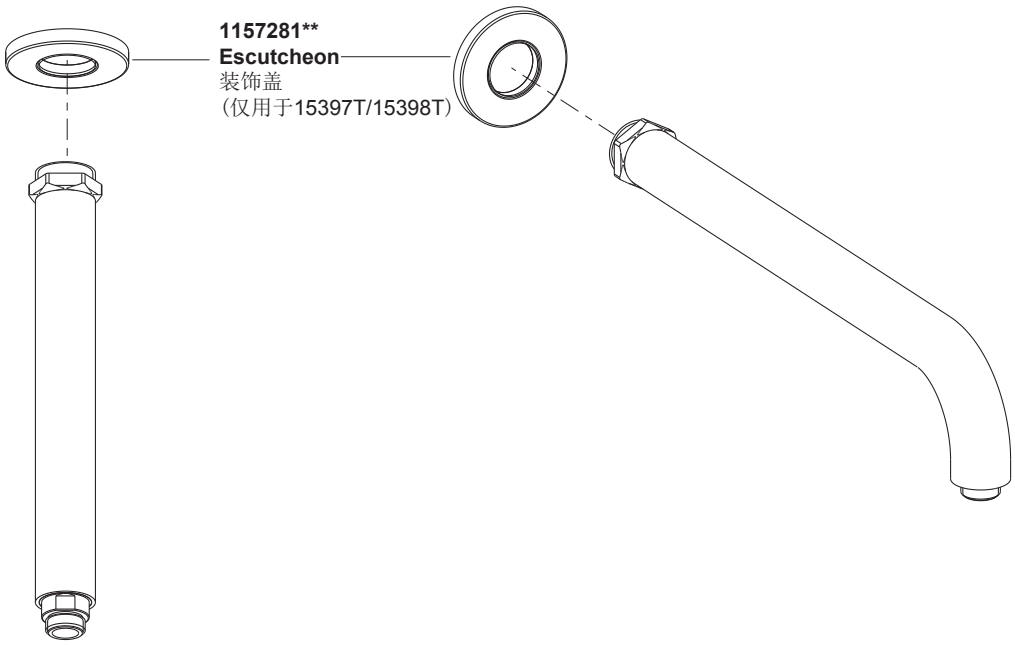

**订购时请说明颜色编号
**Color code must be specified when ordering