KOHLER®

INSTALLATION INSTRUCTIONS

安装说明书

萝瑞 LOURE

Deck-Mount Bath Faucet

14675T-4　缸边(台面)式浴缸龙头

安装之前

所有的资料是按最新出版的产品资料编写而成。科勒公司保留任何时候不经通知即可改变产品特性、包装或产品可供类型的权利。

说明书包括重要的安装、保养及清洁方面的内容，请把这些资料交给用户阅读。

注意事项：

1.一定要先彻底冲洗供水管以清除管道中的杂质。

2.检查供水管有无损坏，如需要，进行替换。

3.尽可能在安装浴缸前安装水龙头。

4.阀体组件安装孔直径不小于39毫米。

5.龙头最高工作压力:0.4MPa(4bar)。水压超过0.4MPa(4 bar)须安装减压阀，否则可能损坏龙头。

BEFORE YOU BEGIN

All information is based on the latest product information available at the time of publication. Kohler Co. reserves the right to make changes in product characteristics, packaging, or availability at any time without notice.

Please leave these instructions for the consumer. They contain important information.

NOTES:

1. Flush the water supply pipes thoroughly to remove any debris.
2. Inspect the supply tubing for damage. Replace as necessary.
3. If possible, install this faucet before installing the tub.
4. The diameter of mounting hole for valve kit no less than 39mm.
5. The hightest working pressure for faucet is 0.4MPa (4 bar). If it exceeds 0.4MPa(4 bar), a pressure reducer os needed. Or maybe damage the faucet.

安装尺寸

将手柄轻轻提起，向左转位热水，右转为冷水。

ROUGH-IN DIMENSIONS

Lift the handle gently. Turn left for hot water, right for cold water.

安装尺寸

ROUGH-IN DIMENSIONS

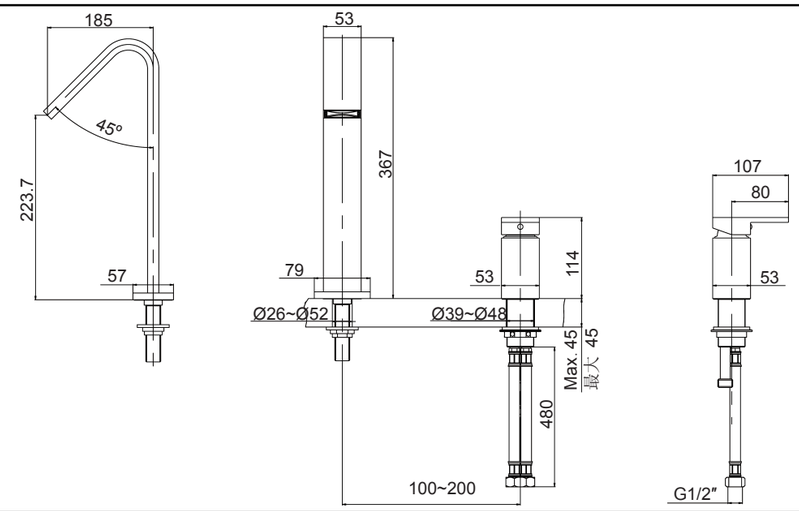

安装步骤 / INSTALLATION

如何安装阀体组件

从阀体组件上(1)取下螺母(4、3)。将橡胶垫片(2)放入阀体组件底部凹槽，将阀体组件插入浴缸安装孔中。从浴缸下方将螺母(3、4)装到阀体组件上。调整阀体组件，锁紧螺母。将软管(6)安装到阀体底部。

注意：带有“COLD”标志的软管安装到右边。

把软管(6)接到水源，带有“COLD”标志的软管接冷水。

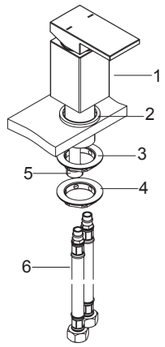

How To Install The Valve Kit

Remove the nuts(4,3) from valve kit(1). Put the rubber gasket(2) into the bottom groove of the valve kit(1). Fit the valve kit into the hole of the tath tub. From underside, install the nuts(3,4). Position the valve kit. Secure the valve kit by tightening nuts. Install hoses(6) onto the valve kit.

NOTE: The hose with “COLD” mark is on the right.

Attach the hoses(6) to water supplies. The hose with “COLD” mark connects to cold water.

如何安装出水口

从出水口组件(7)上取下螺母(11、10)和钢垫(9)。将泡沫垫片(8)装到出水口(7)装饰盖底部凹槽，然后将出水口装于浴缸安装孔中。从浴缸下方安装钢垫(9)、螺母(10、11)，调整出水口，拧紧螺母固定出水口组件。

用软管(12)带垫片(13)连接阀体组件接头(5)和出水口。

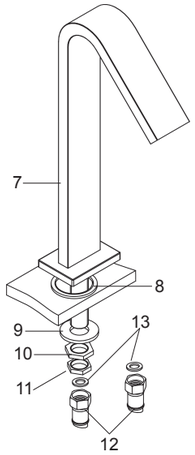

How To Install The Spout

Remove the nuts(11,10) and the steel washer(9) from the spout kit(7). Put the foam washer(8) into the bottom groove of the spout kit escutcheon. Then fit the spout kit to the hole of bath tub. From underside of the bath tub, install the steel washer(9), nuts(10,11). Position the spout. Secure the spout kit by tightening nuts.

Connect the connector(5) of the valve kit and spout with the hose(12) & washers(13).

安装结果检查 / INSTALLATION CHECKOUT

检查并确保所有的衔接处都已拧紧。打开排水系统和主要供水源，检查并修理有漏水的接口。

Ensure that all connections are tightened. Open the drain. Turn on the main water supply and check for leaks. Repair as required.

清洗说明 / CLEANING INSTRUCTIONS

适用于所有加工处理过的表面：以中性肥皂水清洗镀层表面，再以干净的软布彻底擦干整个表面，许多清洁剂，比如氨水、去污粉及洁厕灵等，会对电镀表面造成伤害，切忌使用。

All Finishes: Clean the finish with mild soap and warm water. Wipe entire surface completely dry with clean soft cloth. Many cleaners may contain chemicals, such as ammonia, chlorine, toilet cleaner etc, which could adversely affect the finish and are not recommended for cleaning.

有磨损性的清洁用具或清洁剂也不可使用于科勒牌的水龙头及其配件上。

Do not use abrasive cleaners or solvents on Kohler faucets and fittings.

KOHLER®
SERVICE PARTS
零 件 图

萝瑞 LOURE

Deck-Mount Bath Faucet

14675T-4 缸边(台面)式浴缸龙头

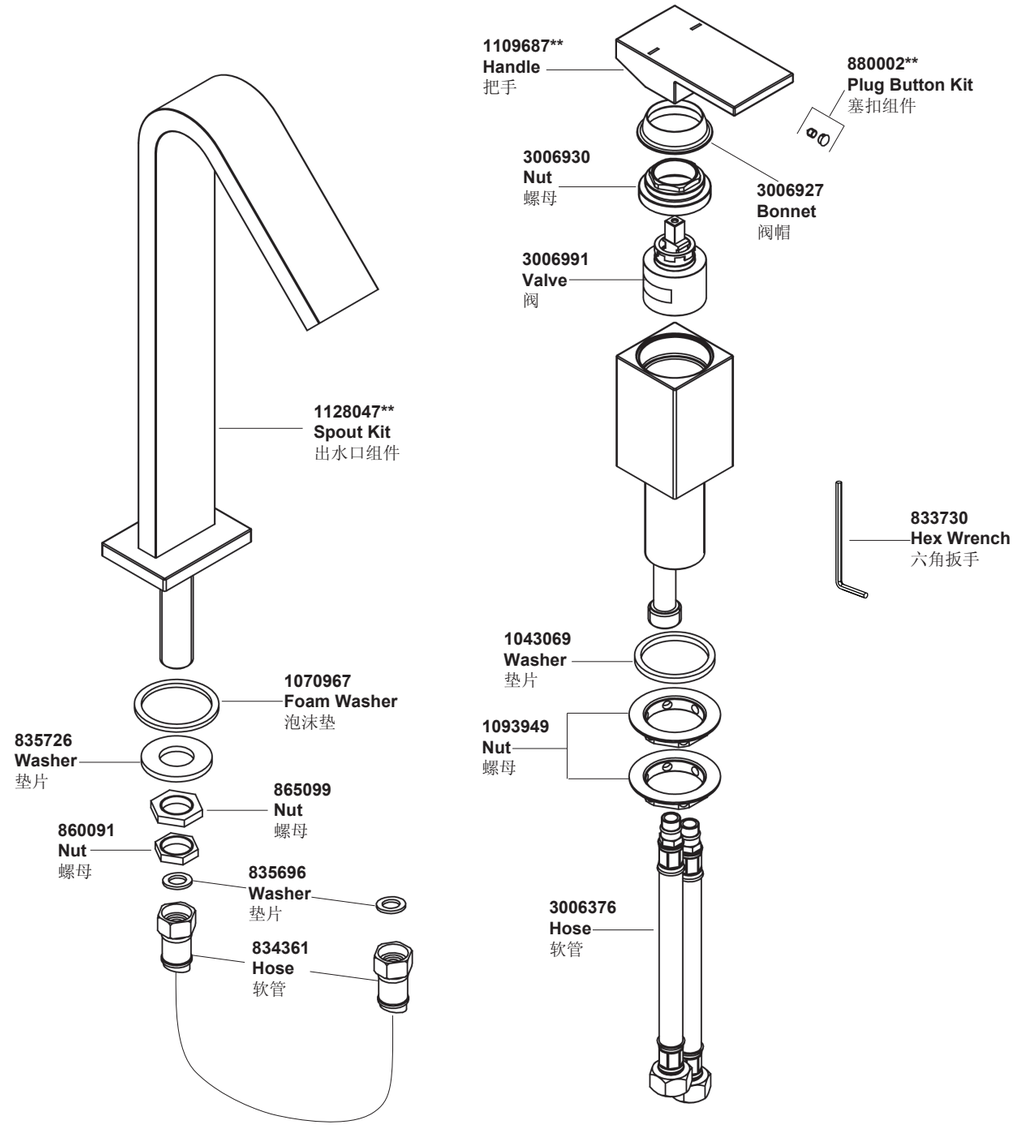

**订购时请说明颜色编号
**Color code must be specified when ordering