KOHLER®

INSTALLATION INSTRUCTIONS

STATELY HOMES VANITY®
K-3095-**-AA

BEFORE YOU BEGIN

HOW TO USE THESE INSTRUCTIONS

Please read these instructions carefully to familiarize yourself with the required tools, materials, and installation sequences. Follow the sections that pertain to your particular installation. This will help you avoid costly mistakes. In addition to proper installation, read all operating and safety instructions.

All information in these instructions is based upon the latest product information available at the time of publication. Kohler Co. reserves the right to make changes in product characteristics, packaging, or availability at any time without notice.

These instructions contain important care, cleaning, and warranty information – **please leave instructions for the consumer**.

PRODUCT REQUIREMENTS

- The product requires two people to install.
- The product requires one Kohler K-2240 Vintage Undercounter Lavatory to complete installation.
- Rough-in supplies and drain piping according to rough-in dimensions.
- Refer to water supply and drain roughing-in, **see Fig. #1**, for installation of Kohler faucet.
- Add 3” long pipe nipples from finished wall to the supplies and drain pipe.

NOTICE: Observe all local plumbing codes.

TOOLS AND MATERIALS REQUIRED

- Screwdriver
- Pencil

Copyright ©1994 Kohler Co.

ROUGHING-IN

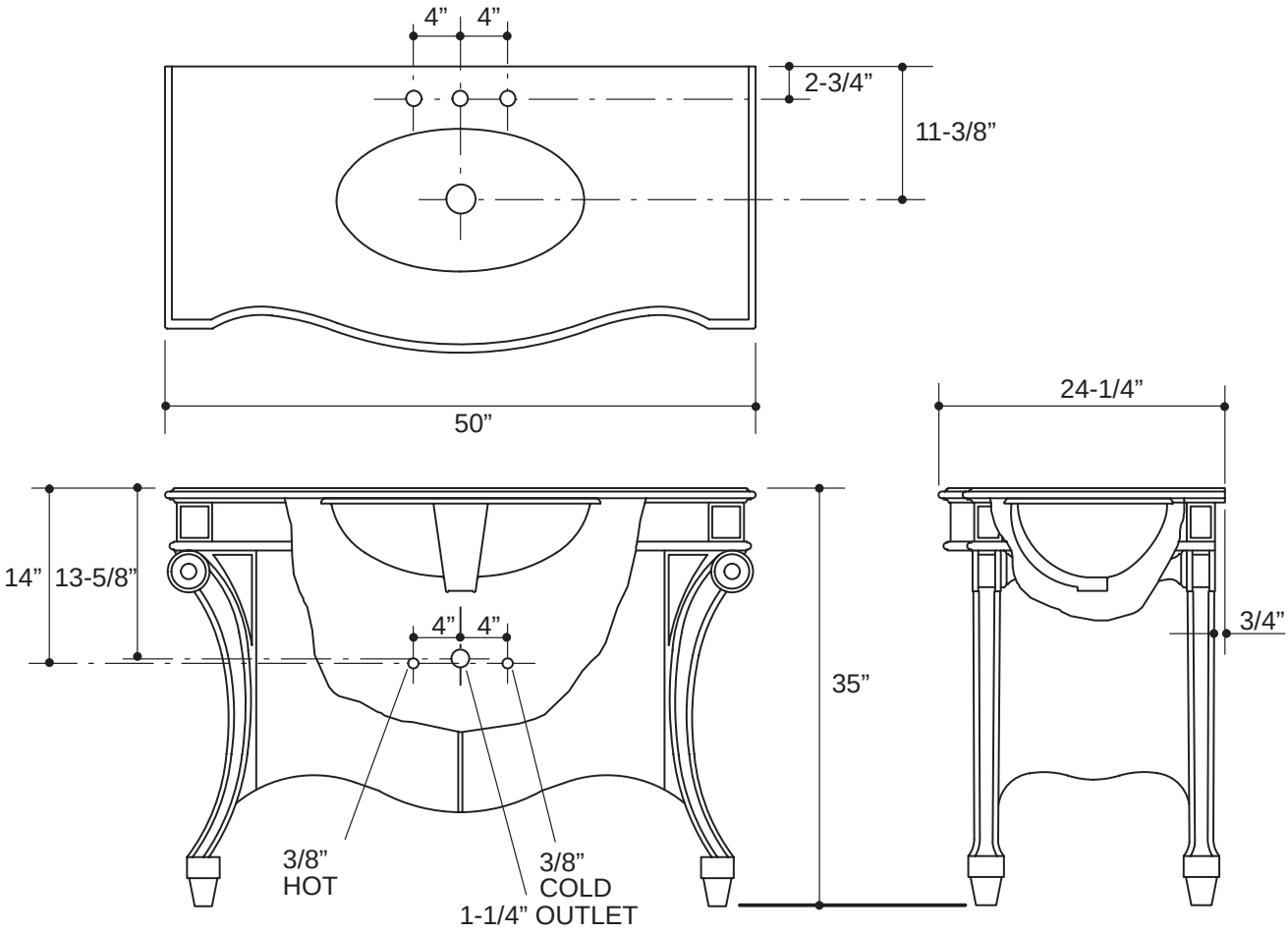

Fig. #1

INSTALLATION

DISASSEMBLE VANITY

Remove the drawers and shelf from the cabinet.

Remove top of vanity by removing 6 screws located at the top sides. For screw locations, **see Fig. #2.**

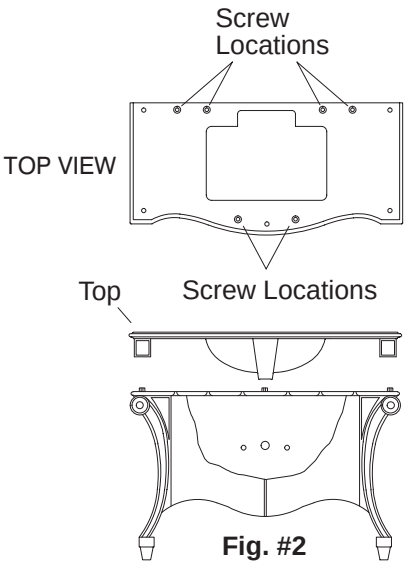

Fig. #2

Turn top upside down, making sure to protect the surface. **Avoid scratching countertop.**

Unpack lavatory.

Apply bead of sealant (provided with lavatory) to top surface of lavatory rim.

Position lavatory on underside of top.

Install lavatory clips with screws, **see Fig. #3.** Use lavatory clips and screws provided in hardware bag of lavatory (position at 4 places). **Avoid forcing screws through countertop.**

Remove excess sealant immediately with a damp cloth.

Install drain and lift rod assembly to lavatory. Lift rod assembly must face toward back of lavatory.

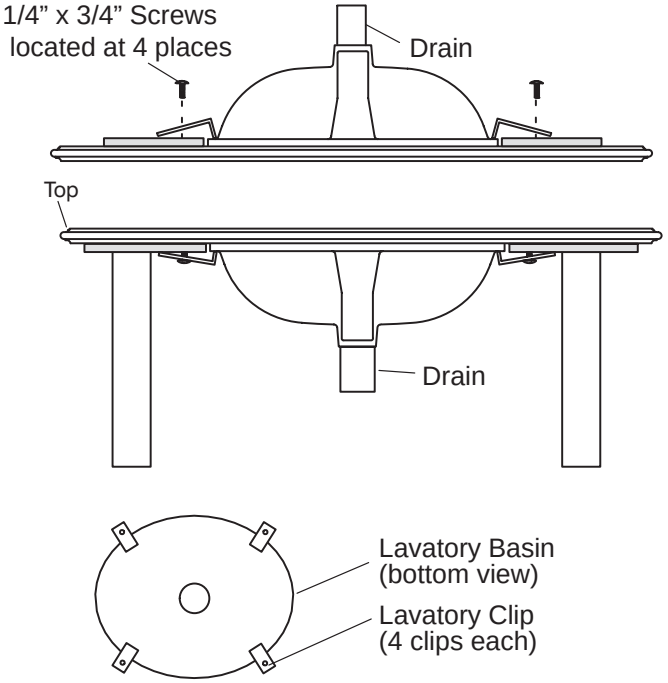

Fig. #3

REASSEMBLE VANITY

Place vanity top on cabinet. Reattach the 6 screws.

Position vanity against the wall.

Mark supply and drain pipe location on back wall of cabinet.

Slide unit away from wall and cut supply and drain pipe holes in back wall of unit.

Slide vanity against wall, ensuring supply and drain pipes fit through holes in cabinet.

Using the two 3-3/4" screws provided, fasten vanity to wall studs through backer board on rear of vanity.

Install faucet, following instructions packed with it. Install escutcheons and supply valves to vanity.

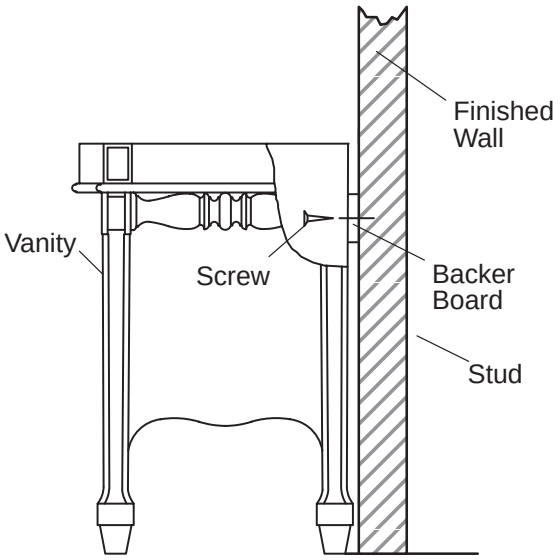

Fig. #4

CONNECT PLUMBING

Install drain tailpiece, cut if necessary.

Connect P-trap and drain line.

Connect water supply lines.

Check all connections for leaks.

Return drawer and shelf to cabinet.

IMPORTANT CONSUMER INFORMATION

CONSUMER RESPONSIBILITIES

Lavatory: When cleaning vitreous china product, **do not use abrasive cleaners** or you may scratch the surface. Follow the lavatory cleaning instructions included with the lavatory.

Vanity: A fine wood vanity should be cared for just like any other fine furniture. Use furniture polish to help retain the beauty of the wood and its finish.

Kohler Co. does not recommend the use of harsh abrasive cleaners on any of its products. Harsh cleaners, used regularly, will scratch the lavatory and vanity surfaces and eventually dull the finish.

Water conditions in various parts of the country will determine any extra cleaning attention you give your new vanity top. A simple routine of daily care will keep your vanity and lavatory looking like new.

REQUESTING SERVICE

Please take a moment to familiarize yourself with the Kohler Warranty, its benefits, and limitations. Kohler Co. and its distributors support you with one of the largest Service Networks of its type. Here's what you need to do if you require service:

FIRST: Contact the dealer or contractor who sold and installed the product. They should be able to solve any problems you may have.

SECOND: If your dealer or contractor cannot solve the problem, they will contact or supply you with the name of the local Kohler Distributor and the:

KOHLER TECHNICAL SPECIALIST

THIRD: If you are unable to obtain warranty service through either your contractor or Kohler Co. distributor, please write us directly at Kohler Co., Attn: Consumer Affairs Department, Kohler, WI 53044 U.S.A.

FOURTH: Include all pertinent information regarding your claim, including a complete description of the product, model numbers, colors, finishes, and the date the product was installed. Include a description of the problem, and a photocopy of your invoice for the products involved. Also give us the name of the contractor and distributor.

LIMITED ONE-YEAR WARRANTY

Kohler plumbing fixtures and fittings are warranted free of manufacturing defects.

Kohler Co. will, at its election repair, replace, or make appropriate adjustment where Kohler Co. inspection discloses any such defects occurring in normal usage within one year after installation. Kohler Co. is not responsible for installation costs.

To obtain warranty service, contact Kohler Co. either through your Dealer or Plumbing Contractor or by writing Kohler Co., Attn: Consumer Affairs Department, Kohler, WI 53044 U.S.A.

Implied warranties, including that of merchantability, are expressly limited in duration to the duration of this warranty. Kohler Co. disclaims any responsibility for consequential damages.

Some states do not allow limitations on how long an implied warranty lasts or the exclusion or limitation of incidental or consequential damages, so this limitation and exclusion may not apply to you. This warranty gives you specific legal rights. You may also have rights which vary from state to state.

This is our exclusive written warranty.

KOHLER CO., KOHLER, WISCONSIN 53044