KOHLER®

WELLWORTH®

THE COMPLETE SOLUTION® TOILET
K-11497
ALSO K-14797

Features

- *Vitreous china*
- *Round bowl*
- *Class Five® flushing system*
- *Includes seat, cover, wax ring, polished chrome trip lever and floor hardware*
- *Less supply*
- *12″ (305 mm) rough-in*
- *1.28 gpf (4.8 lpf)*
- *2-1/8″ (54 mm) glazed trapway*
- *10-1/2″ (267 mm) x 7-3/4″ (197 mm) water area*
- *27-1/2″ (699 mm) x 19-5/8″ (498 mm) x 28-1/4″ (718 mm)*

Codes/Standards Applicable

Specified model meets or exceeds the following:

- *ASME A112.19.2/CSA B45.1*
- *EPA WaterSense®*

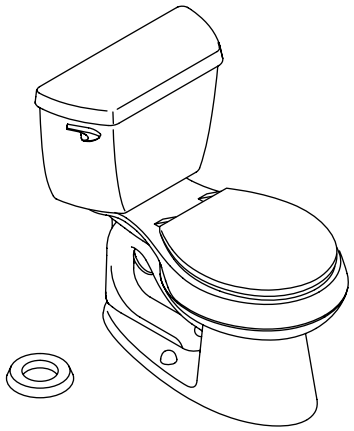

Colors/Finishes

- 0: White

Accessories

- CP: Polished Chrome
- Other: Refer to Price Book for additional colors/finishes

Specified Model

Model	Description	Trip Lever	Colors/Finishes
K-11497	The Complete Solution toilet	left-hand	❑ 0
K-14797	The Complete Solution toilet	left-hand	❑ 0

Recommended Accessories			
K-7637	Angle supply with stop – 3/8″ NPT	❑ CP	❑ Other_____

Product Specification

The round bowl toilet shall be made of vitreous china. Toilet shall be 27-1/2″ (699 mm) in length, 19-5/8″ (498 mm) in width, and 28-1/4″ (718 mm) in height with a 10-1/2″ (267 mm) x 7-3/4″ (197 mm) water area. Product shall be for 12″ (305 mm) rough-in. Product shall feature a 1.28 gpf (4.8 lpf) and Class Five flushing system. Product shall include a seat, cover, wax ring, polished chrome trip lever, and floor hardware. Product shall include a polished chrome trip lever. Product shall be less supply. Product shall have a 2-1/8″ (54 mm) glazed trapway. Toilet shall be Kohler Model K-11497-____ or K-14797-____.

USA/Canada: 1-800-4KOHLER
(1-800-456-4537)
www.kohler.com

WELLWORTH®

Technical Information

Fixture:	
Configuration	two-piece, round
Water per flush	1.28 gal (4.8 L)
Passageway	2-1/8″ (54 mm)
Water area	10-1/2″ (267 mm) x 7-3/4″ (197 mm)
Water depth from rim	5-1/4″ (133 mm)
Seat post hole centers	5-1/2″ (140 mm)

Included components:	
Bowl	K-4197
Tank	K-4436
Tank cover	84591
Trip lever	K-9386-L
Toilet seat	K-4658
Bolt cap accessory pack	1013092
Wax ring and hardware installation kit	1023457

Installation Notes

Install this product according to the installation guide.

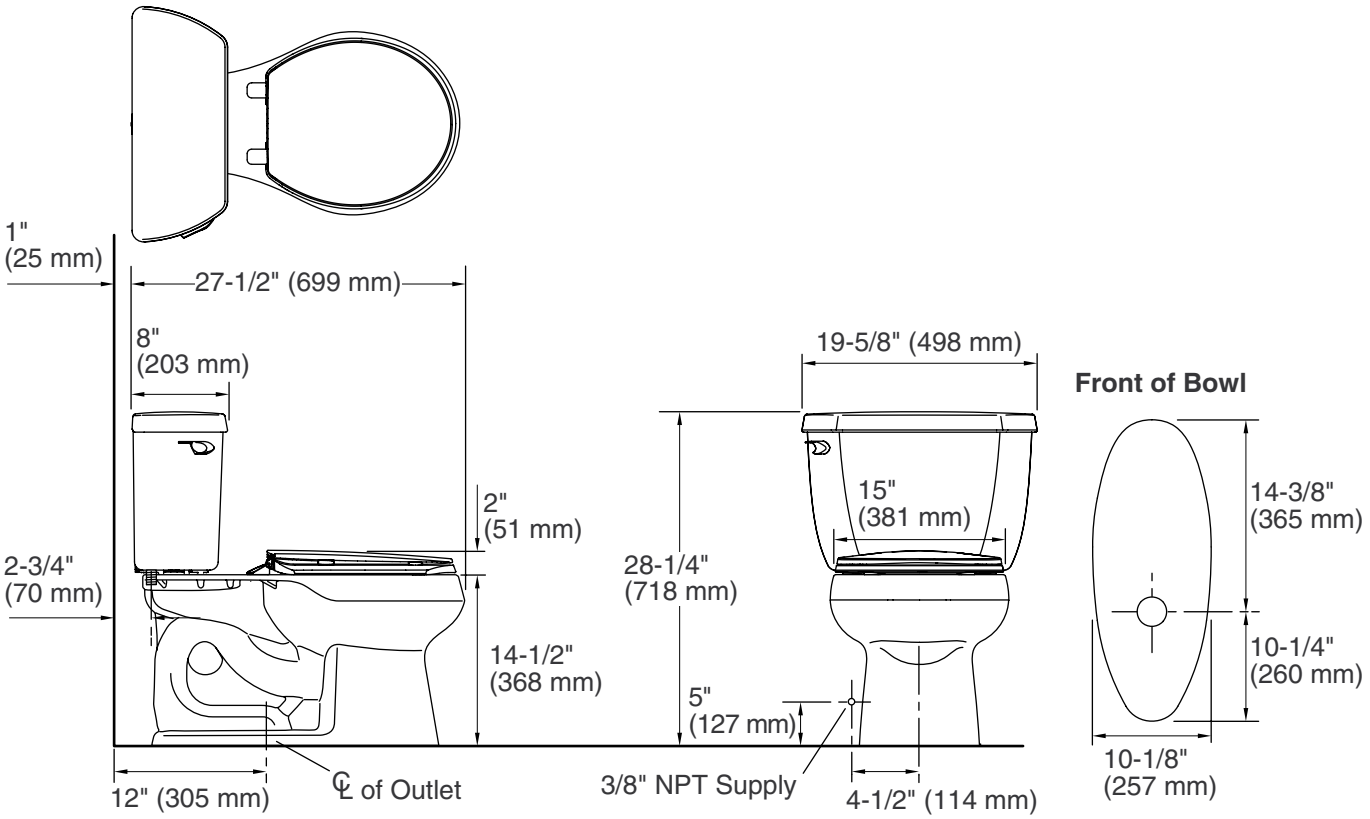

Product Diagram

THE BOLD LOOK OF KOHLER®