KOHLER®

INSTALLATION INSTRUCTIONS

JULY

98918K-B4 Tube Spout Kitchen Faucet

BEFORE YOU BEGIN

All information is based on the latest product information available at the time of publication. Kohler Co. reserves the right to make changes in product characteristics, packaging, or availability at any time without notice.

Please leave these instructions for the consumer. They contain important information.

NOTES:

1. Flush the water supply pipes thoroughly to remove debris.

2. For new installations, install faucet to sink before installing.

HANDLE OPERATION

Lift the handle gently. Turn clockwise for hot water, turn counter-clockwise for cold water.

ROUGH-IN DIMENSIONS

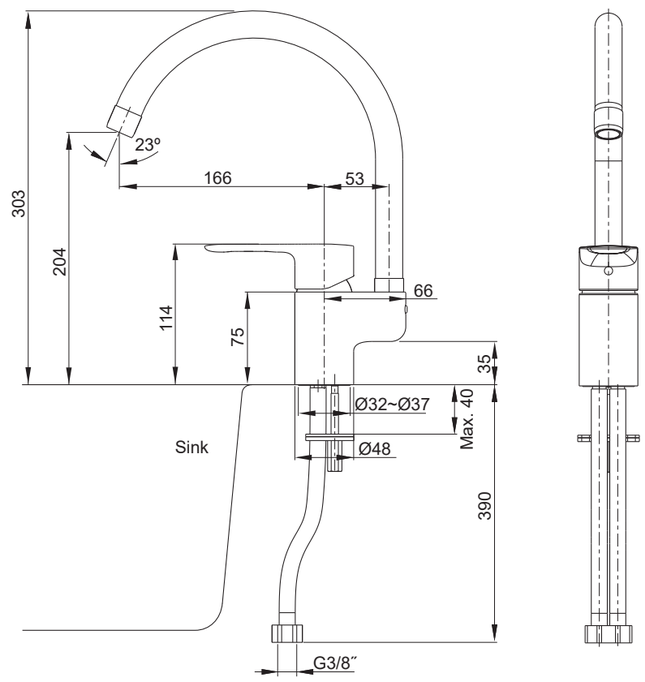

INSTALLATION

How to Install the Faucet

Make sure the bulge of the spout assembly(1) align the groove on the faucet body(2). Insert the spout assembly into the faucet body, tighten the screw(3) with hex wrench to secure the spout.

Install mounting stud(4) into the faucet body base(5). Tighten it by hand. Slide the washer(6) over the flexible hoses(7) and mounting stud, and into the groove at the bottom of the faucet body.

Insert the flexible hoses into the sink hole. Position the faucet. From underside of the sink, place the washers(8, Rubber washer is on the top) on to the mounting stud, and secure the faucet with the nut(9).

Attach the hoses to water supplies. When facing front of faucet, the left hose connects to hot water, the right hose with “COLD” label connects to cold water.

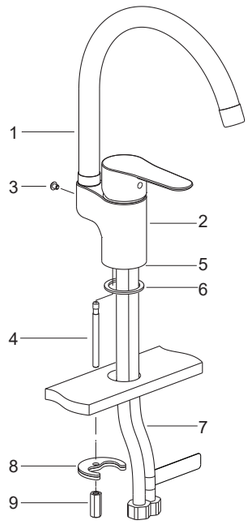

INSTALLATION CHECKOUT

Ensure that all coupling nuts are tight.

Ensure that the lever handle is in the off position.

Turn on the main water supply and drain, and check for leaks. Repair as needed.

Remove the aerator(10). Run hot and cold water through faucet for about one minute to remove any debris. Check for leaks. Repair as needed. Remove any debris from the aerator. Shut off the faucet. Reinstall the aerator.

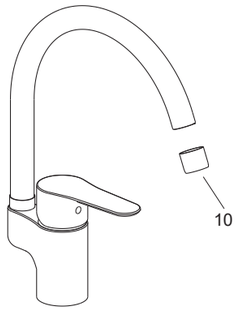

CLEANING INSTRUCTIONS

All Finishes: Clean the finish with mild soap and warm water. Wipe entire surface completely dry with clean soft cloth. Many cleaners may contain chemicals, such as ammonia, chlorine, toilet cleaner etc, which could adversely affect the finish and are not recommended for cleaning.

Do not use abrasive cleaners or solvents on Kohler faucets and fittings.

"LEAD FREE" is marked on the back of the faucet signifying its compliance with the United States AB1953

KOHLER®

SERVICE PARTS **JULY**

98918K-B4 Tube Spout Kitchen Faucet

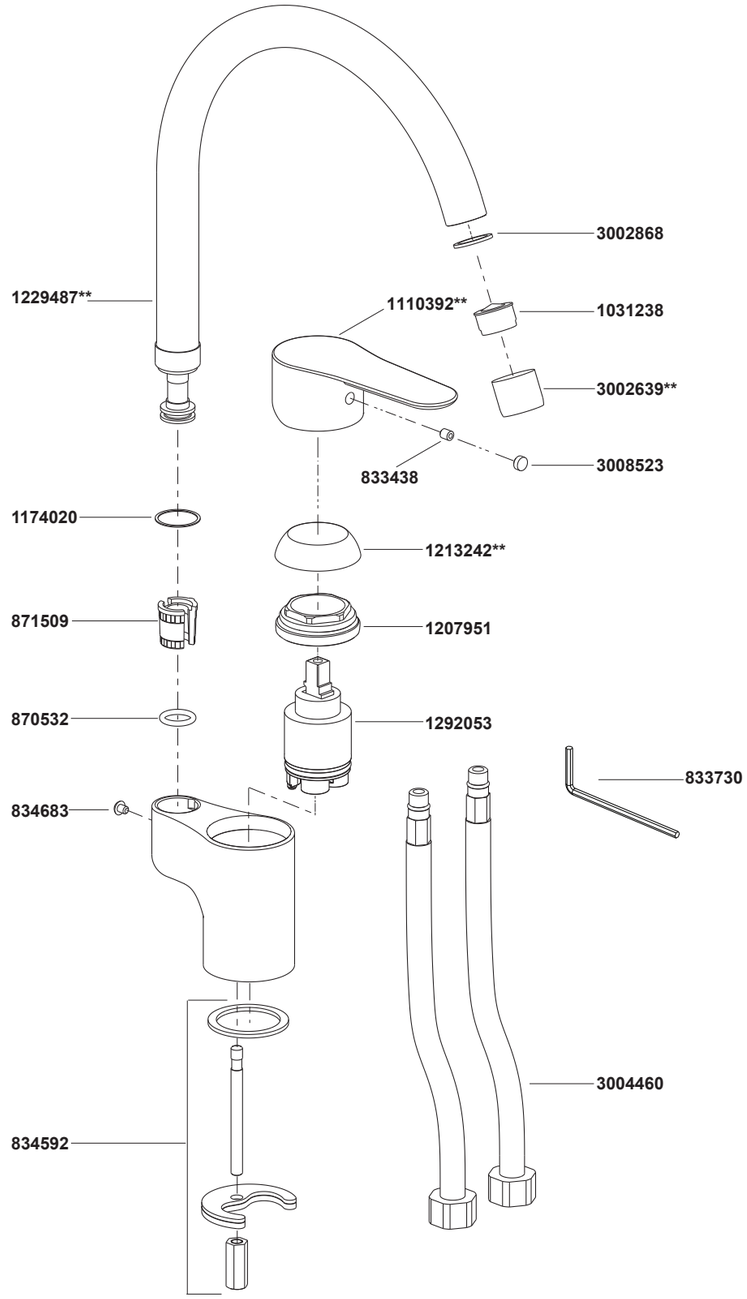

****Color code must be specified when ordering**