KOHLER®

SERVICE PARTS

TAUT

74053K-4 Tube Spout Kitchen Faucet
21368K-4 Tube Spout Kitchen Faucet
21369K-4 Tube Spout Kitchen Faucet
21370K-4 Tube Spout Kitchen Faucet

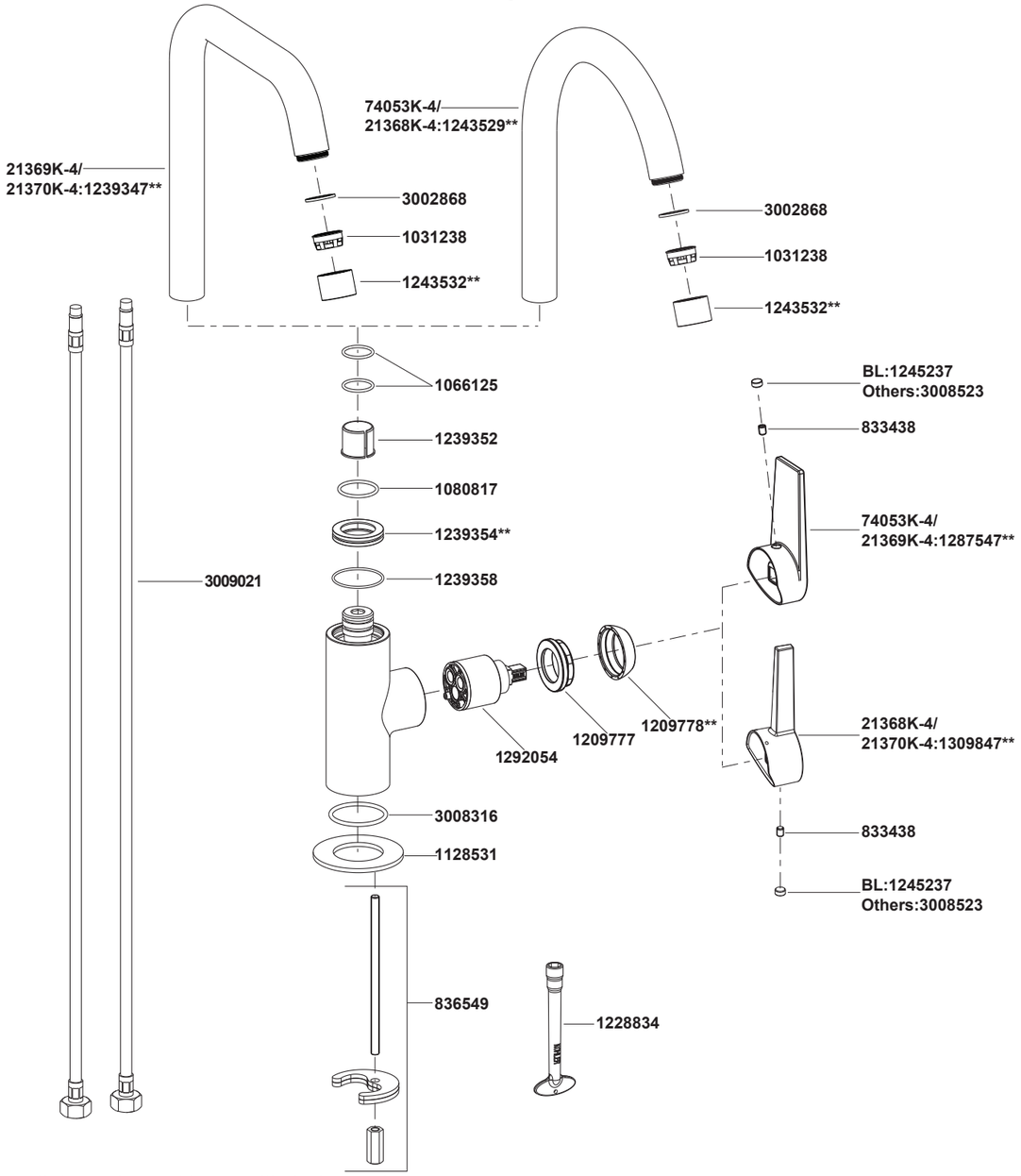

**Color code must be specified when ordering.

KOHLER®

INSTALLATION INSTRUCTIONS

TAUT

74053K-4 Tube Spout Kitchen Faucet
21368K-4 Tube Spout Kitchen Faucet
21369K-4 Tube Spout Kitchen Faucet
21370K-4 Tube Spout Kitchen Faucet

BEFORE YOU BEGIN

All information is based on the latest product information available at the time of publication. Kohler Co. reserves the right to make changes in product characteristics, packaging, or availability at any time without notice.

Please leave these instructions for the consumer. They contain important information.

NOTE:
1. Inspect the supply pipes for damage and leakage. Replace and maintain as necessary
2. Flush the water supply pipes thoroughly to remove any debris.
3. If possible, install this faucet before installing sink.

HANDLE OPERATION

Open the handle gently. Turn clockwise for cold water, turn counter-clockwise for hot water.

ROUGH-IN DIMENSIONS

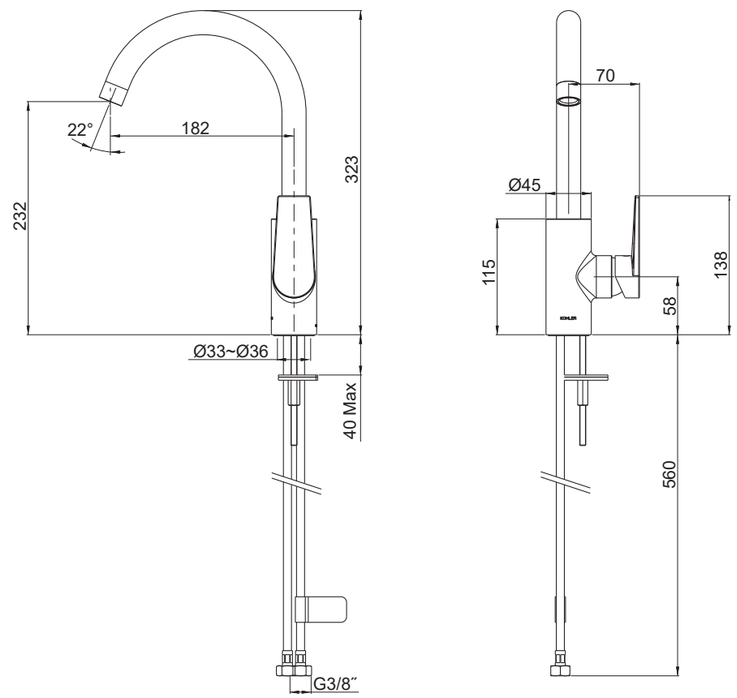

74053K-4

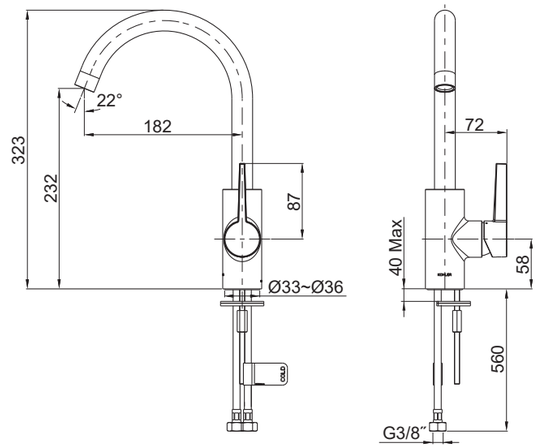

21368K-4

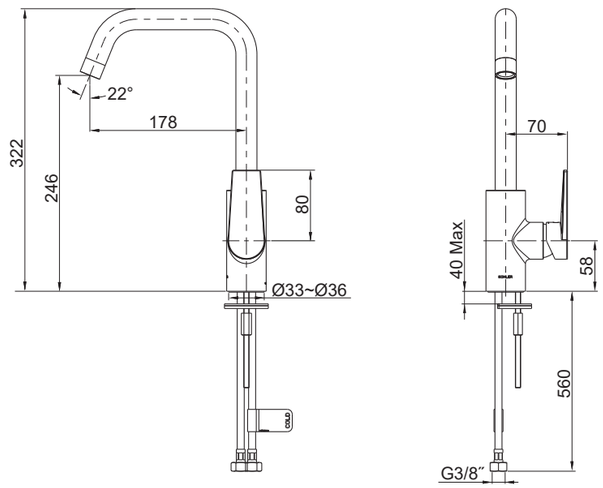

21369K-4

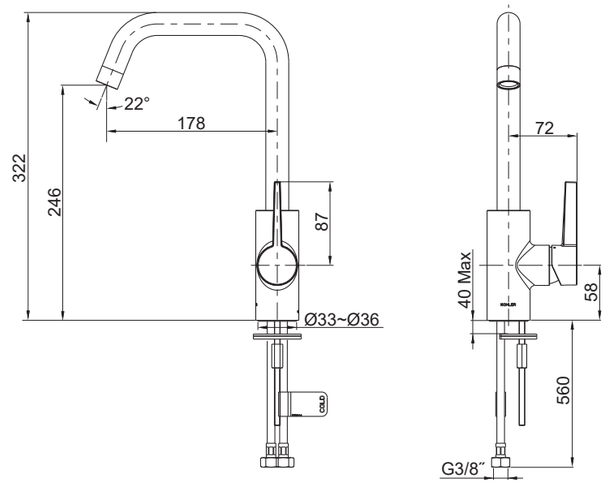

21370K-4

INSTALLATION

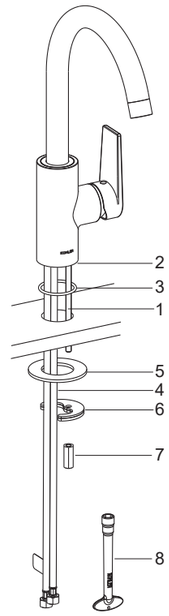

Install the mounting stud(1) into the faucet body base(2). Insert the O-ring(3) into the groove at the bottom of the body. Insert the flexible supply hoses(4) into the sink.

From underside of the sink, place the washer(5), washers(6, rubber washer is on the top) and nut(7) onto mounting stud. Position the faucet so that the handle is on the right side. Tighten the nut by tool(8) to secure the faucet.

Attach the hoses to water supplies. The hose with "COLD" label is for cold water.

INSTALLATION CHECKOUT

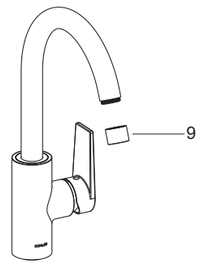

Ensure that all connections are tightened and the handle is in the off position.

Open the drain. Turn on main water supply and check for leaks. Repair as needed.

Remove the aerator(9). Turn on the faucet handle. Run hot and cold water through the spout for about one minute to remove any debris. Remove debris from the aerator. Shut off the faucet and reinstall the aerator.

CLEANING INSTRUCTIONS

All Finishes: Clean the finish with mild soap and warm water. Wipe entire surface completely dry with clean soft cloth. Many cleaners may contain chemicals, such as ammonia, chlorine, toilet cleaner etc, which could adversely affect the finish and are not recommended for cleaning.

Do not use abrasive cleaners or solvents on Kohler faucets and fittings.

"LEAD FREE" is marked on the back of the faucet signifying its compliance with the United States AB1953