KOHLER®

SERVICE PARTS

TAUT

21366K-4 Pull Down Kitchen Faucet
21367K-4 Pull Down Kitchen Faucet

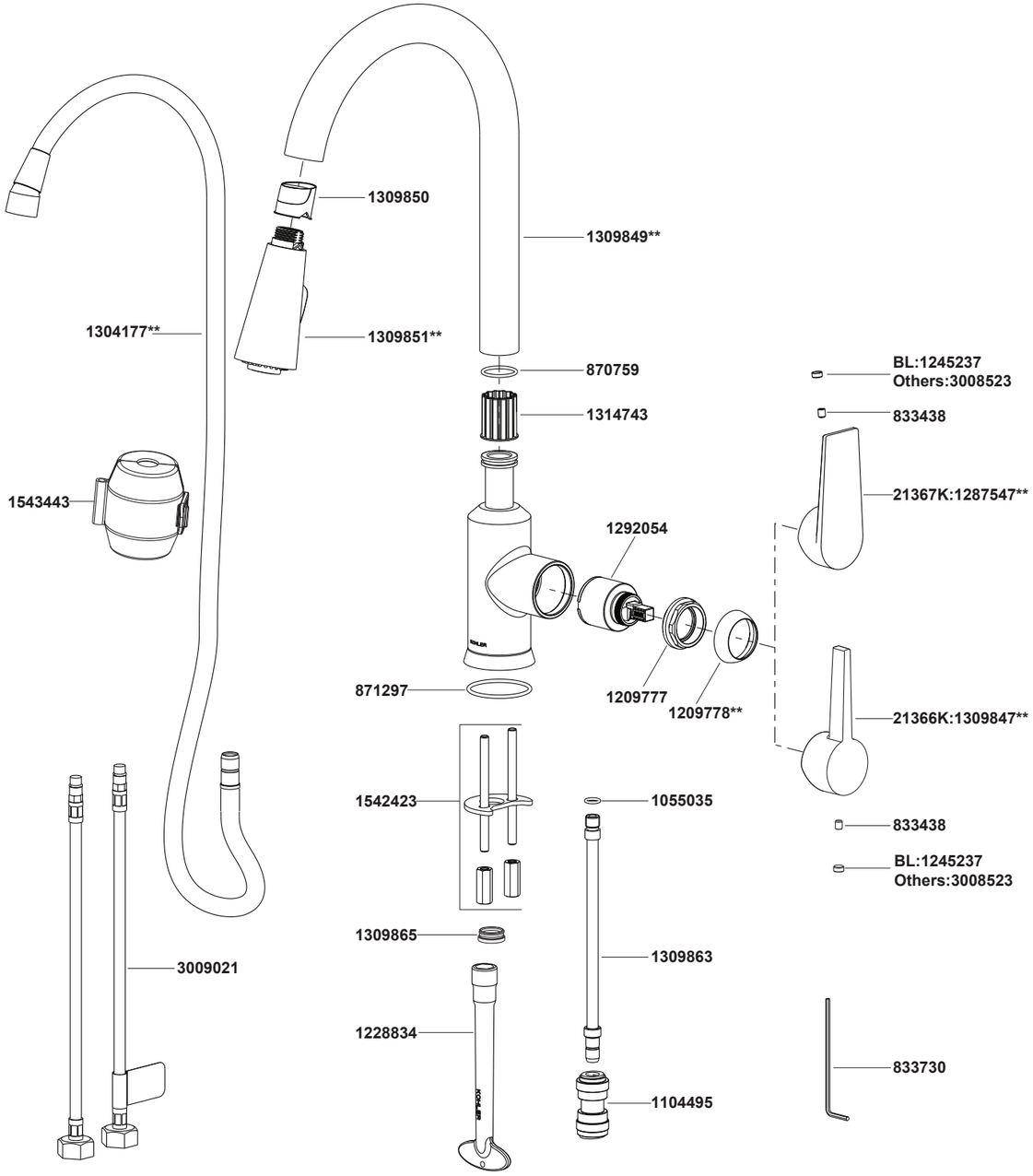

**Color code must be specified when ordering.

KOHLER®

INSTALLATION INSTRUCTIONS

TAUT

21366K-4 Pull Down Kitchen Faucet
21367K-4 Pull Down Kitchen Faucet

BEFORE YOU BEGIN

All information is based on the latest product information available at the time of publication. Kohler Co. reserves the right to make changes in product characteristics, packaging, or availability at any time without notice.
Please leave these instructions for the consumer. They contain important information.

NOTE:
1. Flush the water supply pipes thoroughly to remove debris.
2. For new installations, assemble the faucet to sink before installing.
3. The highest working pressure for spray is 0.5MPa(5bar). If it exceeds 0.5MPa(5bar), a pressure reducer is needed. The highest water and environment temperature is 60ºC. Please keep spray and spout away from heater, or it may become damaged and cause injury to the user.

HANDLE OPERATION

Open the handle gently. Turn clockwise for cold water, turn counter clockwise for hot water.

ROUGH-IN DIMENSIONS

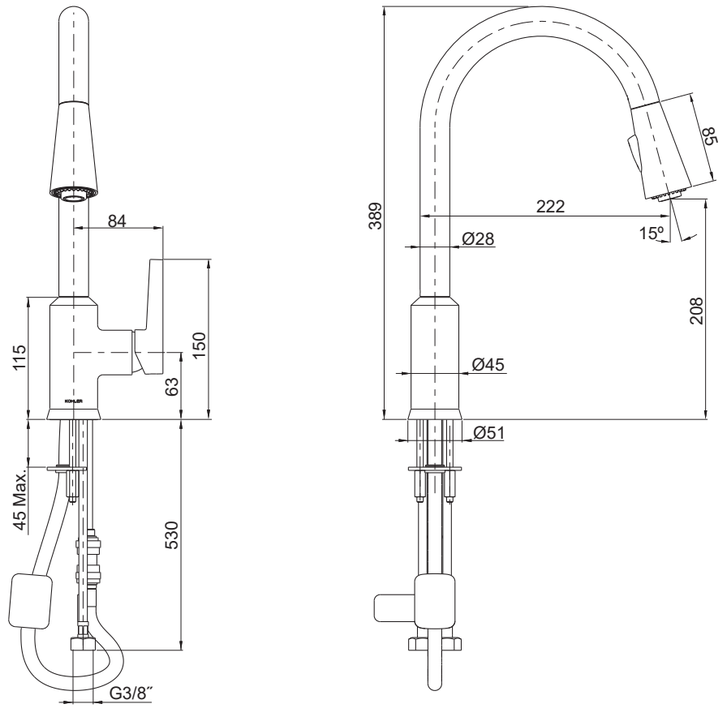

21366K-4

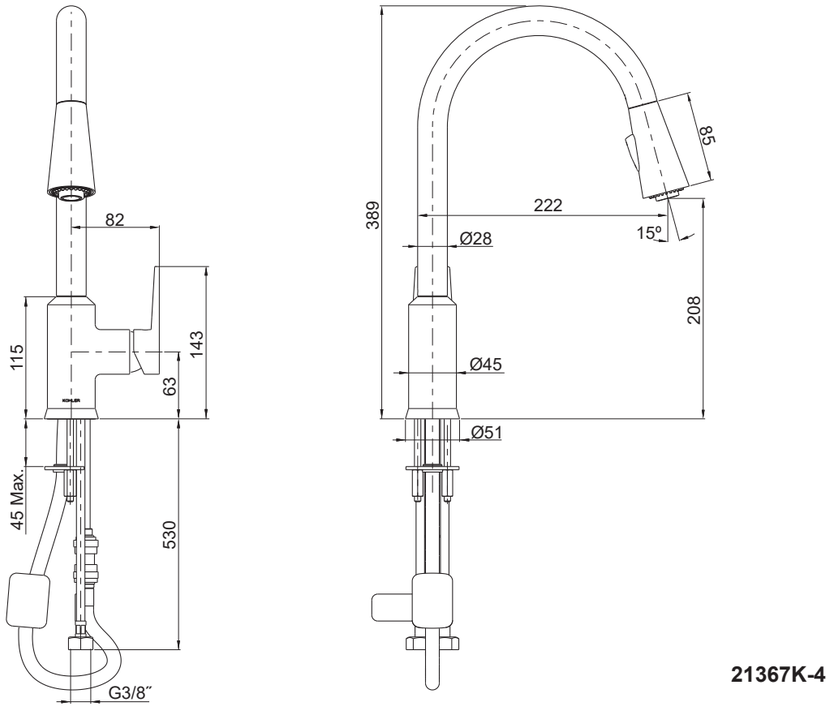

INSTALLATION

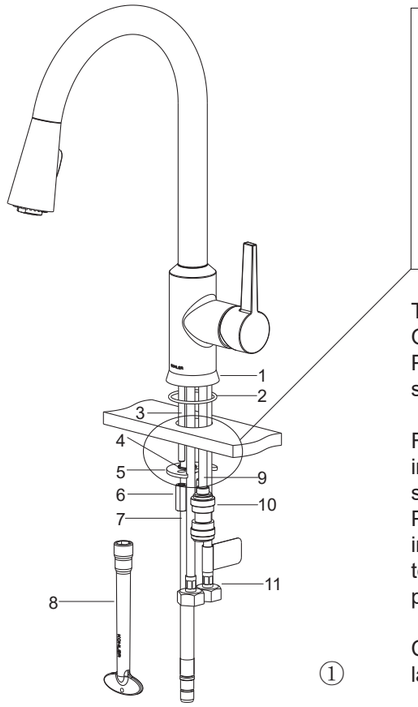

①

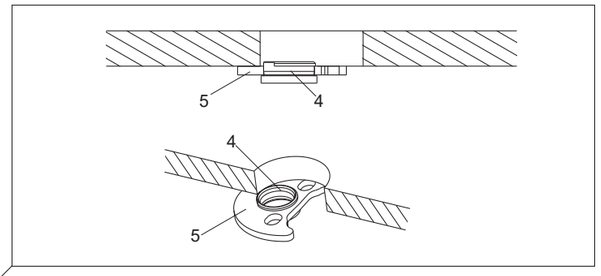

Tighten the studs(3) into the faucet body(1) bottom. Slide the O-ring(2) into the groove of the faucet body through the studs. Put the hoses and faucet body kit into the mounting hole of the sink. Let the bottom of the body against the deck.

From underside of the sink, slide the pull hose(7) into the guide(4) in the bracket(5). Install the bracket with the guide onto the studs(The guide is on the left). Screw the nuts(6) onto the studs. Position the faucet so that the handle is on the right side, the guide in the deck(as shown in the figure). Tighten two nuts by the tool(8) to secure faucet to sink. Install the connector(10) onto the copper pipe(9).

Connect the hoses(11) to water supplies. The hose with “COLD” label is for cold water.

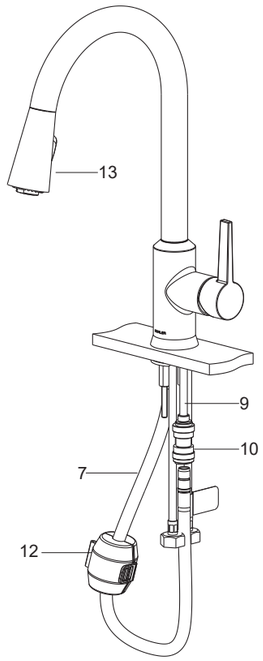

②

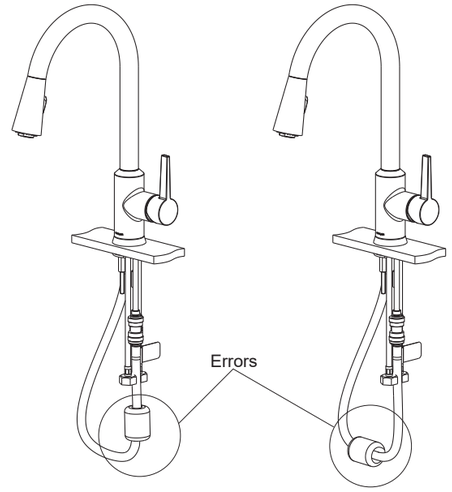

Put the weight(12) onto the pull hose(7). Connect the pull hose and connector(10). Adjust and position the weight. **Note:** Don’t over distort the hose. Please avoid the wrong installation for the weight as shown in the above.

Try to pull out the spray(13), check whether it can go back to its original position smoothly or not. If not, position the weight again.

INSTALLATION CHECKOUT

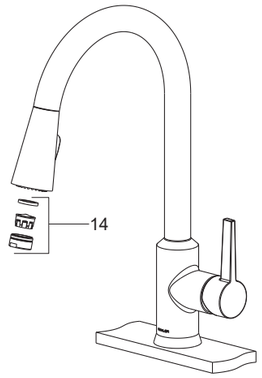

Ensure that all coupling nuts are tight. Ensure that the lever handle is in the off position. Turn on the main water supply and drain, and check for leaks. Repair as needed.

Remove the aerator kit(14). Turn on the faucet, run hot and cold water for about one minute to remove any debris. Remove any debris from the aerator kit. Shut off the faucet. Reinstall the aerator kit.

CLEANING INSTRUCTIONS

All Finishes: Clean the finish with mild soap and warm water. Wipe entire surface completely dry with clean soft cloth. Many cleaners may contain chemicals, such as ammonia, chlorine, toilet cleaner etc, which could adversely affect the finish and are not recommended for cleaning.

Do not use abrasive cleaners or solvents on Kohler faucets and fittings.

"LEAD FREE" is marked on the back of the faucet signifying its compliance with the United States AB1953