KOHLER®

FORTE® Wall-mount Bath and Shower Faucet

FORTE®
K- 72665T-4

Product Specification:

Model	Spout Reach	Includes	Finish	NOTE
72665T-4	225mm	225mm spout, valve, aerator, flexible hose, diverter, handle, connector, Rain Duet multi-function handshower and bracket	CP	To order 10218T-4-PGD

Product Dimension:

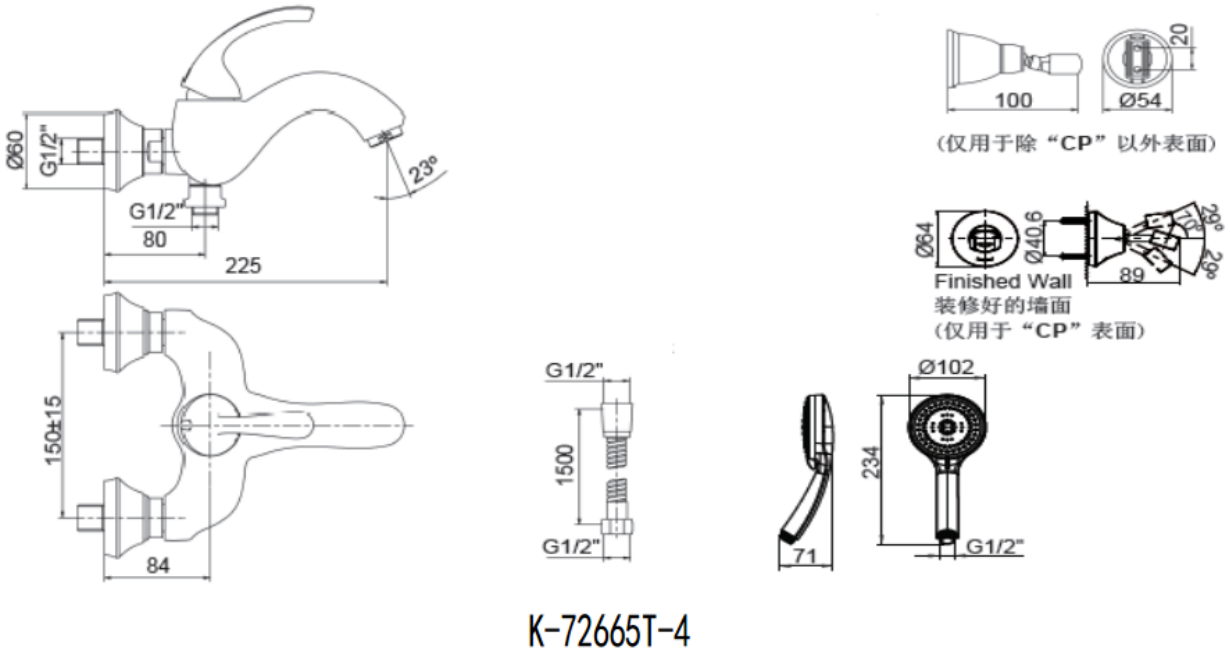

Please note that the above information are subject to change without notice.