KOHLER®

凯诗

SERVICE PARTS
零 件 图

OCCASION
Two-Handle Wall-Mount Sink Faucet Trim

EX27103T-3 双把墙出水脸盆龙头 不含阀芯(十字型把手)
EX27103T-4 双把墙出水脸盆龙头 不含阀芯(杆型把手)
EX27103T-9 双把墙出水脸盆龙头 不含阀芯(柱型把手)

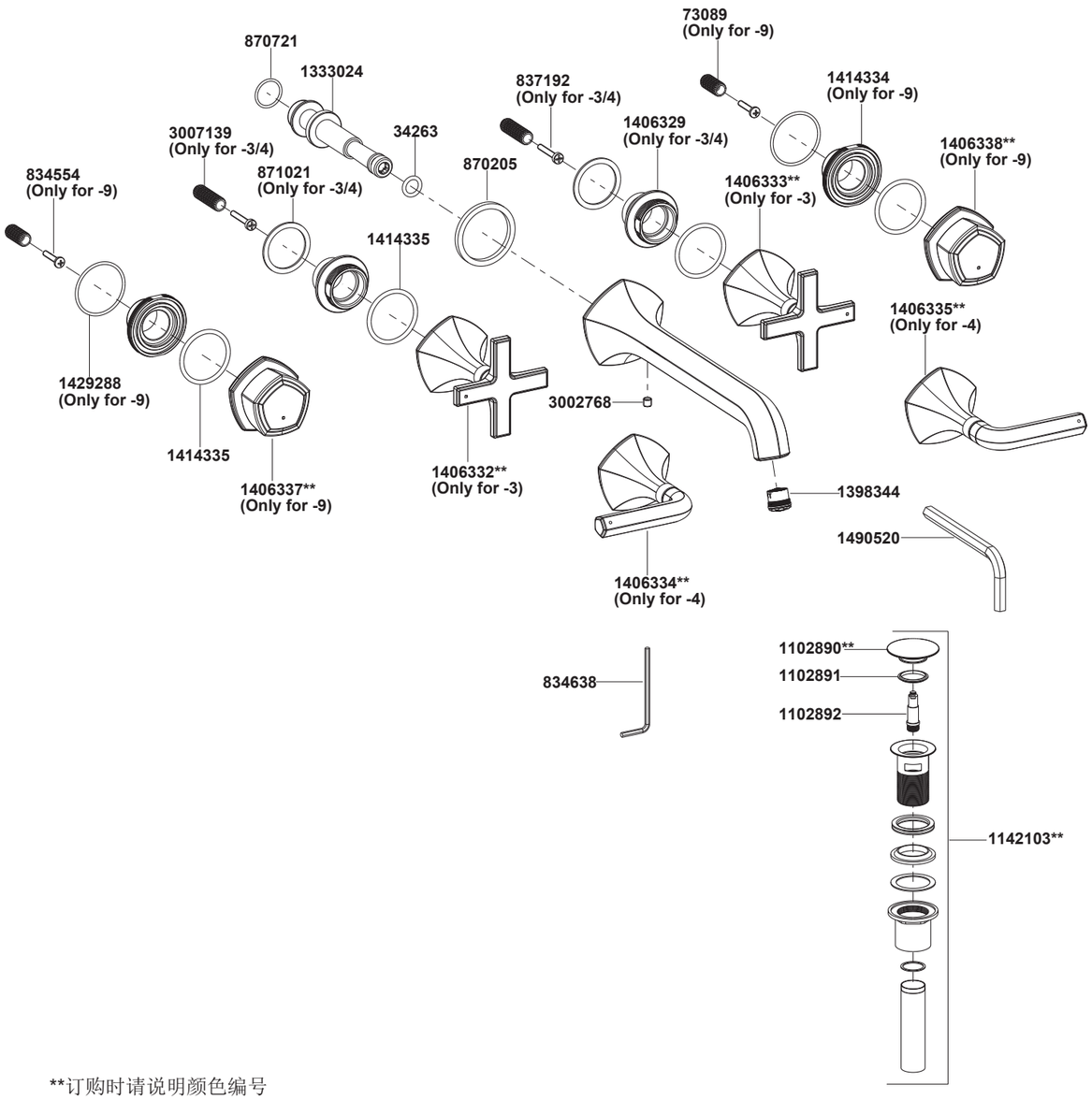

**订购时请说明颜色编号
**Color code must be specified when ordering

KOHLER®

凯诗

INSTALLATION INSTRUCTIONS
安装说明书

OCCASION
Two-Handle Wall-Mount Sink Faucet Trim

EX27103T-3 双把墙出水脸盆龙头 不含阀芯(十字型把手)
EX27103T-4 双把墙出水脸盆龙头 不含阀芯(杆型把手)
EX27103T-9 双把墙出水脸盆龙头 不含阀芯(柱型把手)

安装之前

所有的资料是按最新出版的产品资料编写而成。科勒公司保留任何时候不经通知即可改变产品特性、包装或产品可供类型的权利。

说明书包括重要的安装、保养及清洁方面的内容，请把这些资料交给用户阅读。

注意事项：
1. 一定要先彻底冲洗供水管以清除管道中的杂质。
2. 检查供水管有无损坏和漏水。如需要，替换和维修之。
3. 遵守当地管路安装条例。
4. 本产品需与双把墙出水脸盆龙头阀芯31141T-NA或34667T-NA搭配使用。
5. 确保安装此产品之前，双把墙出水脸盆龙头阀芯31141T-NA或34667T-NA已安装完毕。

BEFORE YOU BEGIN

All information is based on the latest product information available at the time of publication. Kohler Co. reserves the right to make changes in product characteristics, packaging, or availability at any time without notice.
Please leave these instructions for the consumer.
They contain important information.

NOTES:
1. Flush the water supply pipes thoroughly to remove debris.
2. Inspect the supply tubing for damage and leakage. Replace and maintain as necessary.
3. Observe local plumbing codes.
4. These products should match with the wall mount lavatory faucet valve 31141T-NA or 34667T-NA.
5. Install the wall mount lavatory faucet valve 31141T-NA or 34667T-NA before installing these products.

使用说明

对于杆型把手-4，逆时针旋转左把手为热水，顺时针旋转右把手为冷水。

对于十字型和柱型把手-3/9，顺时针旋转左把手为热水，逆时针旋转右把手为冷水。

HANDLE OPERATION

For lever handle -4, turn the left handle counter-clockwise for hot water, right handle clockwise for cold water.

For cross/knob handle -3/9, turn the left handle clockwise for hot water, right handle counter-clockwise for cold water.

安装尺寸

ROUGH-IN DIMENSIONS

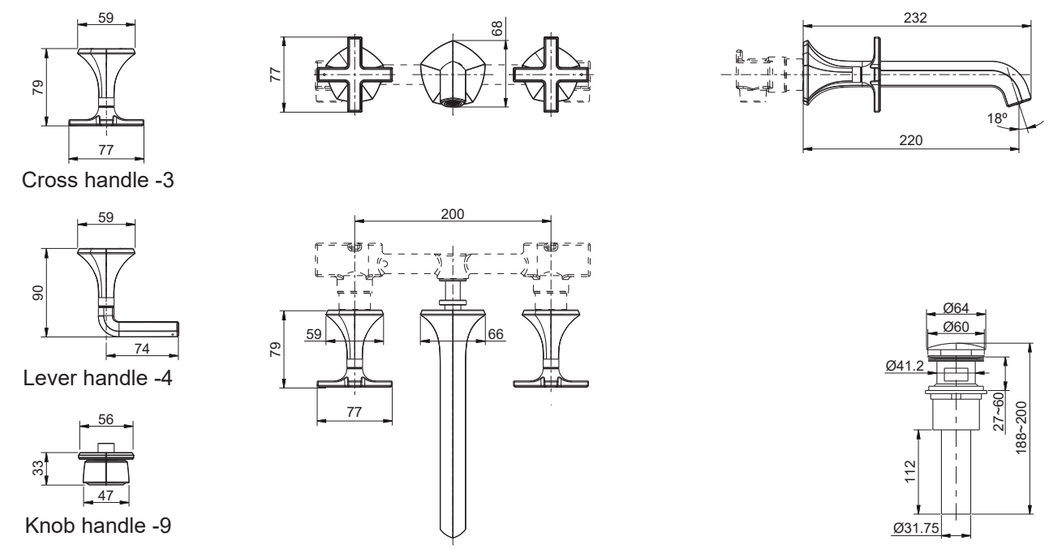

安装步骤 INSTALLATION

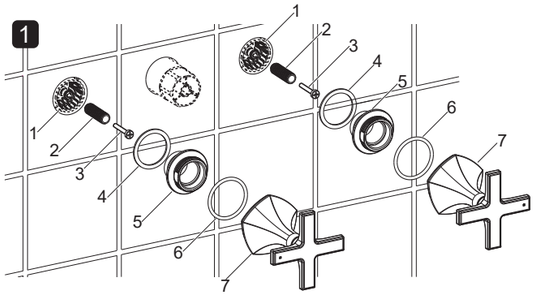

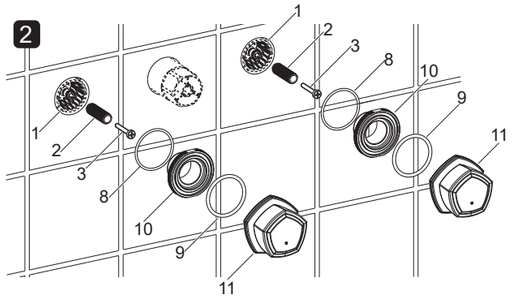

如何安装把手

墙壁装修好后，去掉31141T-NA或34667T-NA上的阀体保护套。

将齿套(2)安装到阀芯(1)上，用螺钉(3)锁紧。

对于EX27103T-3 & EX27103T-4：如图1所示，将橡胶垫片(4)装到螺母(5)底部凹槽中，将螺母旋到阀芯上并贴紧墙壁。将O型圈(6)装入把手组件(7)底部凹槽中。确保阀芯处于关闭状态，将把手组件(7)安装到螺母(5)上。

对于EX27103T-9：如图2所示，将O型圈(8, 9)分别装到螺母(10)顶部和底部凹槽中，将螺母旋到阀芯上并贴紧墙壁。确保阀芯处于关闭状态，将把手组件(11)安装到螺母(10)上。

注意：有红色标记的把手组件装左侧。

How to Install the Handles

Remove the valves protectors from 31141T-NA or 34667T-NA after the wall is finished.

Install the stems(2) onto the valves(1), and then tighten them with screws(3).

For EX27103T-3 & EX27103T-4: As shown in figure 1, put the rubber washers(4) into the bottom grooves of the nuts(5). Screw the nuts onto the valves until they are against the finished wall. Put the O-rings(6) into the bottom grooves of the handle kits(7). Ensure the valves are closed. Install the handle kits(7) onto the nuts(5).

For EX27103T-9: As shown in figure 2, put the O-rings(8, 9) into the top and bottom grooves of the nuts(10). Screw the nuts onto the valves until they are against the finished wall. Ensure the valves are closed. Install the handle kits(11) onto the nuts(10).

NOTE: The handle kit with red mark should be installed on the left side.

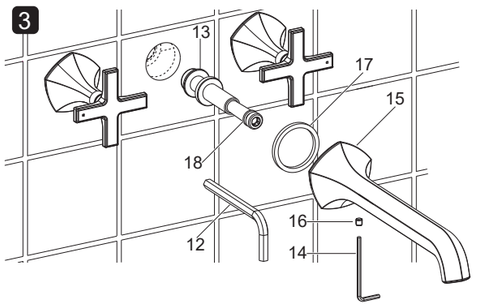

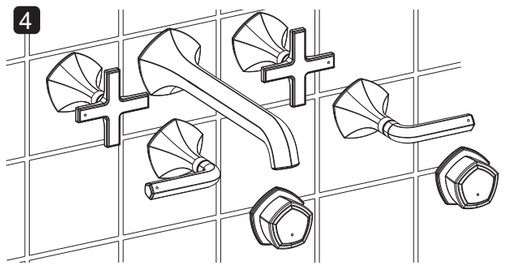

如何安装出水嘴

去掉31141T-NA或34667T-NA上的出水嘴保护套。

如图3所示，用8mm六角扳手(12)将接头(13)旋紧到阀体上。用3mm六角扳手(14)旋松出水嘴(15)内的螺钉(16)。确保垫片(17)已嵌入到出水嘴底部凹槽中，将出水嘴出口朝下安装到接头(13)上，使其紧贴墙面。锁紧螺钉以固定出水嘴。**注意：**不要划伤接头上的O型圈(18)。

阀芯处于关闭位置时，出水口和把手安装完毕状态如图4所示。

How to Install the Spout

Remove the spout protector from 31141T-NA or 34667T-NA after the wall is finished.

As shown in figure 3, screw the connector(13) into the valve body with 8mm hex wrench(12). Loosen the screw(16) in the spout(15) with 3mm hex wrench(14). Ensure the washer(17) is put into the bottom groove of the spout. Install the spout onto the connector(13) with its outlet downwards until it is against the finished wall. Tighten the screw to secure the spout. **NOTE:** Don't damage the O-ring(18) on the connector.

When the installation is completed, the correct position of the spout and handles with the valve closed is shown in figure 4.

如何安装排水器

把锁紧螺母(19)、塑料垫片(20)、橡胶垫圈(21)和尾管(22)从排水本体(23)依次取下。在尾管螺纹处须缠绕足以密封的密封胶带或涂合适的密封胶，并装回排水本体。

把排水本体从脸盆上部孔插入。再依次将橡胶垫圈(小面朝上)、塑料垫片和锁紧螺母从脸盆下方装回到排水本体上。锁紧螺母。

注意：如果需要，可直接在法兰盘(24)底面沿周围涂一圈密封油灰或其它密封剂，而不使用橡胶垫片(25)。

在锁紧螺母拧紧后，不可调整排水本体位置，否则会破坏油灰或密封剂密封。

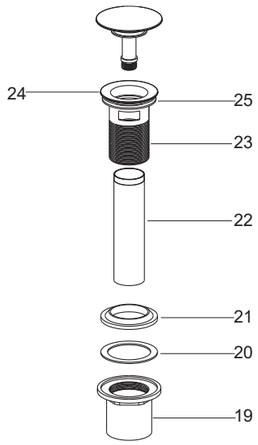

How to Install the Drain

Remove the locknut(19), plastic washer (20), rubber gasket(21) and tailpiece(22) from the drain body(23). Supply enough tape or sealant to tailpiece thread. Reinstall the tailpiece.

Insert the drain body into the lavatory. Install the rubber gasket(Tapered side up), plastic washer and locknut back to the drain body in turn. Tighten the locknut.

NOTE: If needed, apply a ring of plumbers putty or other sealants around the underside of the drain flange(24), instead of using rubber washer(25).

Do not reposition the drain after the locknut is tightened, or you may break the putty or sealant seal.

安装结果检查 INSTALLATION CHECKOUT

检查并确保所有衔接螺母都已拧紧，确保把手在关闭位置。

打开排水器和主要供水源，检查是否有漏水。如有漏水，修理之。

用硬币拆下起泡器(26)。打开水龙头冷热水，让水流出约一分钟以清除杂质，检查渗漏。冲洗起泡器，关闭水龙头，重新装回起泡器。

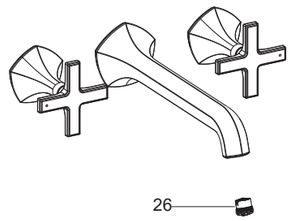

Ensure all connections are tight.
Ensure the handles are in the off position.

Turn on the drain and main water supply, and check for leaks. Repair as needed.

Remove the aerator(26) with coin.
Turn on the faucet. Run hot and cold water through the spout for about one minute to remove any debris. Check for leaks. Remove any debris from the aerator. Shut off the faucet. Reinstall the aerator.

清洗说明 CLEANING INSTRUCTIONS

适用于所有加工处理过的表面：以中性肥皂水清洗镀层表面，再以干净的软布彻底擦干整个表面，许多清洁剂，比如氨水、去污粉及洁厕灵等，会对电镀表面造成伤害，切忌使用。

有磨损性的清洁用具或清洁剂也不可使用于科勒牌的水龙头及其配件上。

All Finishes: Clean the finish with mild soap and warm water. Wipe entire surface completely dry with clean soft cloth. Many cleaners may contain chemicals, such as ammonia, chlorine, toilet cleaner etc. which could adversely affect the finish and are not recommended for cleaning.

Do not use abrasive cleaners or solvents on Kohler faucets and fittings.