KOHLER®

REACH UP

ONE-PIECE TOILET WITH SEAT

K-25412H

ALSO K-25413H/25414H

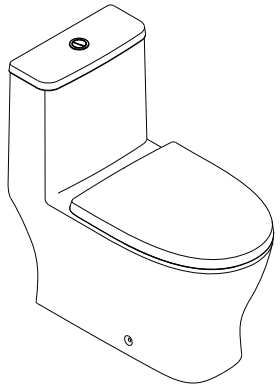

Features

- *Vitreous china*
- *Elongated bowl*
- *Skirted bowl*
- *Includes wrapped seat or nightlight seat or slim seat*
- *Includes polished chrome push button*
- *Wash down flushing system*
- *Dual flush 3/6 liter per flush*
- *185 mm rough-in for P-trap*
- *680 x 370 x 745 mm*

Codes/Standards Applicable

Specified model meets or exceeds the following:

- *MS 1552*
- *TIS 792*
- *BS:EN 997*
- *ASME 112.19.2/CSA B45*

Technical Information

Fixture:	
Configuration	one-piece, elongated
Water per flush	3/6 liter
Passageway	51 mm
Water area	127 x 102 mm
Water depth from rim	230 mm
Seat post hole centers	140 mm

Included Components:	
Tank cover	1337868-SP-**
Wrapped seat (for K-25412H) or Nightlight seat (for K-25414H) or Slim seat (for K-25413H)	K-28770K K-28767K K-28773K
P-Trap connector assy	1138552

Installation Notes

Install this product according to the installation guide.

Specified Model

Model	Description	Color/Finished
K-25412H	Reach Up one-piece toilet, P-Trap with wrapped seat	0: White
K-25413H	Reach Up one-piece toilet, P-Trap with slim seat	0: White
K-25414H	Reach Up one-piece toilet, P-Trap with nightlight seat	0: White

Recommened Accessories		Color/Finished
1065832	Water supply hose, stainless	CP: Polished Chrome
1265885-SP	Shut off valve	CP: Polished Chrome
1084337-A	S-Trap connector	N/A

Dimensions are approximate.
Unit: mm

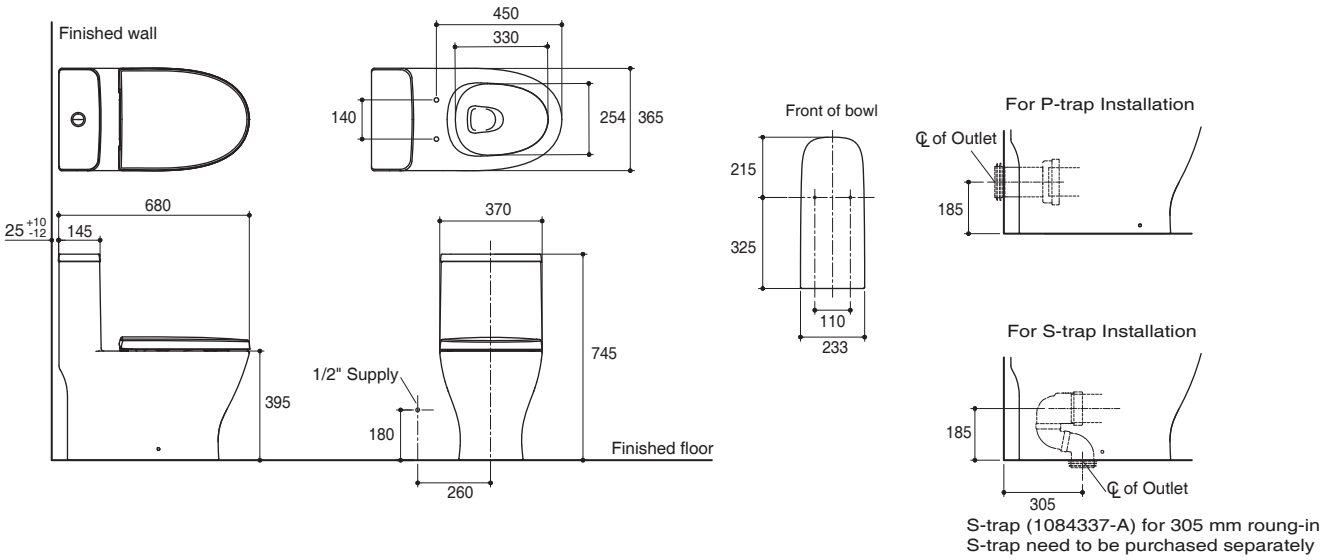

Note: The recommended dimension for installation can be adjusted according to user preferences and layout.
Kohler Co. reserves the right to make changes in product characteristics, packaging, or availability at anytime without notice.

Product Diagram

Call Center: 0-2700-9299
kohler.com