KOHLER®

INSTALLATION INSTRUCTIONS
安装说明书

艾非
AVID

Avid Duo DM Sensor Faucet

K-29936H-N-CP AVID DUO DM SENSOR FCT COLD-AC 0.5GPM
AVID皂液感应龙头–单冷，交流含电源，1.9升

安装之前

所有的资料是按最新出版的产品资料编写而成。科勒公司保留任何时候不经通知即可改变产品特性、包装或产品可供类型的权利。
说明书包括重要的安装、保养及清洁方面的内容，请把这些资料交给用户阅读。

注意事项：

1. 一定要先彻底冲洗供水管以清除管道中的杂质，使用水源为自来水或可供饮用水。
2. 请勿将强力及冲击施于产品，以免造成故障，引起漏水。
3. 安装、清洁龙头时，切勿损伤感应窗口表面，以免造成故障。
4. 如果是安装新的洗面盆，可将水龙头和排水组件先安装到面盆上。
5. 安装时务必按照说明书的要求正确连接导线，龙头安装完毕后才可向电源盒供电。
6. 对于冷热混水龙头，先将连接热水的角阀关闭，以免烫伤。
7. 修理面盆时，用黑色电工胶布粘住感应窗口。
8. 维修交流龙头时，必须断开交流电源并关闭水源。
9. 本器具不适用于身体、感官或精神能力下降或缺乏经验和知识的人员(包括儿童)，除非他们已由负责设备安全的人员对设备的使用进行监督或指导。应监督儿童，以确保他们不玩的器具。
10. 电源软线不能更换。如电线损坏，应将器具报废。
11. 必须使用随器具提供的新软管组，旧的软管组不能重复使用。

BEFORE YOU BEGIN

All information is based on the latest product information available at the time of publication, Kohler Co. reserves the right to make changes to product characteristics, packaging, or availability at any time without notice. Please deliver these instructions for the consumer. They contain important installation, maintenance and cleaning information.

NOTES:

1. Flush the water supply pipes thoroughly to remove debris. Faucet is designed for tap water or potable water.
2. Handle the faucet with care to avoid damaged.
3. Do not damage the surface of sensing window when installing or cleaning the faucet.
4. For new installations, install the faucet and drain to the lavatory before installing the lavatory.
5. carefully follow the installation instructions provided. Only provide to the electric power box after the installation is completed.
6. For faucet with temperature mixer, please turn off valve before connecting to hot water to avoid scalding.
7. Cover the sensing window with black tape when repairing lavatories.
8. Turn off the electrical source and shut down water supply before servicing faucet.
9. This appliance is not intended for use by persons (including children) with reduced physical, sensory or mental capabilities, or lack of experience and knowledge, unless they have been given supervision or instruction concerning use of the appliance by a person responsible for their safety. Children should be supervised to ensure that they do not play with the appliance.
10. The supply cord cannot be replaced. If the cord is damaged, the appliance should be scrapped.
11. The new hose-sets supplied with the appliance are to be used and that old hose-sets should not be reused.

科勒（中国）投资有限公司
中国上海市静安区江场三路158号　邮编：200436
制造商：上海科勒电子科技有限公司
中国上海市宝山区丰翔路1955号　邮编：200444

人靠近龙头，龙头上方显示屏将会自动闪烁出水显示灯。

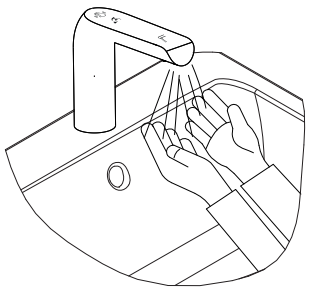

When approaching faucet, water LED on screen above the faucet will auto flash.

双手伸到出水口下方感应范围内，龙头开始出水。同时龙头上方显示屏会闪烁皂液灯，提示可以挥手取皂液。计时器开始50秒倒计时，如连续感应到有人时计时器计时到"00"后不再计时；如感应到人离开计时器停止计时并显示熄灭。

Place both hands under the faucet within the sensing range, water will outflow from the faucet. Meanwhile, soap LED on the screen above the faucet will light up indicating waving hand for soap solution. The timer starts the 50 s countdown, such as continuously sensing that the timer is no longer timed after "00";Such as sensing the person leaving the timer to stop the timing and display off. The counter starts from 50s to 00s and stop if people is in the sensing range. If people goes away, the counter stops and display off

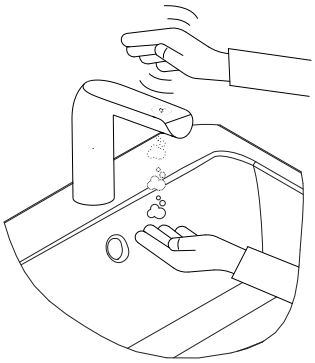

将手在龙头上方挥动，出皂倒计时(3秒)内，伸手在龙头下方出水感应区准备接皂。

Waving hand above the faucet, place hands under faucet within sensing range and prepare for soap solution dispensed within 3s soap dispense countdown.

皂液洁净双手后，重新将手伸到出水口下方感应范围内，龙头开始出水。双手洗净后离开，龙头将在0.5~1秒后自动停止出水。

After cleaning both hands, place hands under the faucet within the sensing range, water will outflow from the faucet. The faucet will auto stop water outflow after 0.5~1s after cleaning both hands and leave away.

安装尺寸(毫米) ROUGH-IN DIMENSIONS(mm)

交流电/冷热混合型
AC, MIXOR

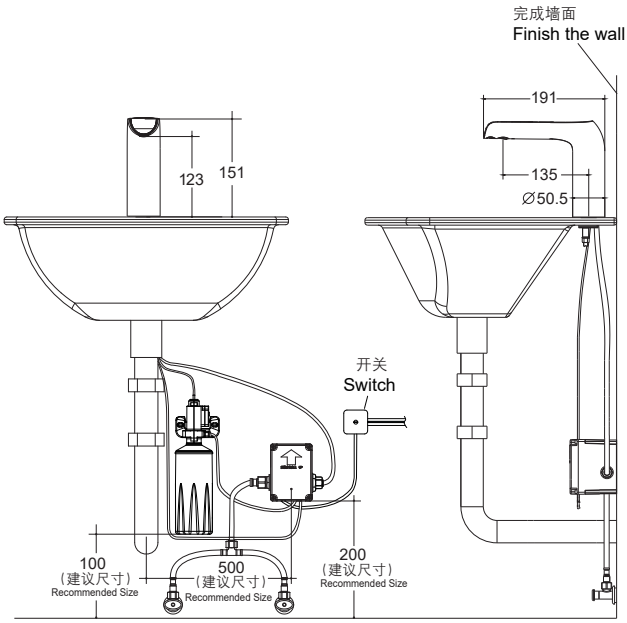

交流电/单冷型
AC, COLD

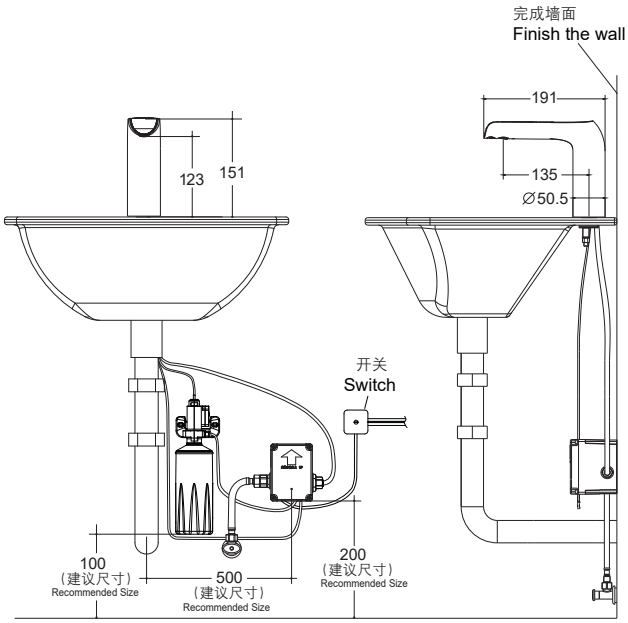

Drain
排水组件

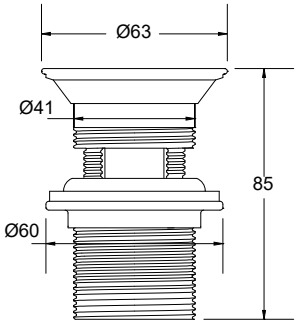

注意：
请勿将龙头安装在台面上，同时搭配台上盆。

Note:
please do not install the faucet on the table and match the washbasin

技术参数

电源：交流 电压220V，频率50Hz
检测时间：小于0.5秒
关阀延时：0.5～1秒
感应距离：自动调节
流量：0.5GPM（约1.9L/min）
超时用水控制：超时用水1分钟，自动止水。
环境温度：1 ～40℃
进水温度：0.5～71℃
适用水压：0.05～0.86MPa
出皂液量：约1.0mL
适用皂液粘度：1～3000MPa·s
皂液瓶容量：约1500mL

TECHNICAL SPECIFICATION

Power: AC 220V, 50Hz
Senser Duration: Less than 0.5s
Shut-off Delay: 0.5~1s
Sensing Distance: Automatic adjustment
Flow Rate: 0.5GPM (About 1.9L/min)
Overtime Flowing Control: Automatically stop flushing when the faucet senses an object for more than 1 minute continuously
Ambient Temperature: 1~40℃
Supply Water Temperature: 0.5~71℃
Supply Water Pressure: 0.05~0.86MPa
Liquid soap volume: about 1.0mL
Applicable liquid soap viscosity: 1～3000MPa·s
Soap solution bottle capacity: about 1500mL

安装步骤

如何安装水龙头

一 龙头与面盆的安装固定

将龙头给皂软管(9)及线(8)和进水软管(7)穿过橡胶垫片(2)，并将橡胶垫片(2)嵌入龙头(1)底部的盘槽中，再将给皂软管(9)及线(8)和进水软管(7)从面盆安装孔穿过，从台盆下方依次将垫片(3)压片(4)固定环(5)穿过给皂软管(9)及线(8)和进水软管(7)，将固定环按照图示方向拧在牙管上，用十字螺丝刀将两个螺钉(6)紧固在固定环上，由螺钉端部压紧压片(4)固定水龙头。

二 安装控制组件

拧下控制盒盖(11)螺钉(12)，打开控制盒(10)，根据安装尺寸图（图一）在墙壁合适的位置钻孔，打入膨胀管(13)，使控制盒紧贴墙面，再用螺钉(14)将其固定在墙壁上。

注意：控制盒长边端需竖直放置，出水口位置可根据需要左右调整。

对于冷热混水龙头，将软管(16)一端与三通进水软管组件(17)连接，另一端与控制组件(15)进水口连接，再将出水口与标有“出水管”的龙头出水软管(8)连接，三通进水软管组件另外两端与角阀(18)连接。

对于单冷龙头，将软管(16)一端与控制组件(15)的滤网(19)相连，另一端与角阀连接，再将控制组件出水口与标有“出水管”的龙头出水软管(8)连接。

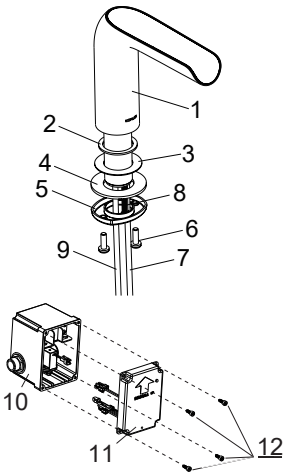

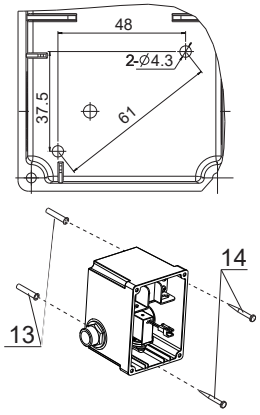

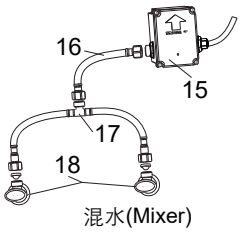

混水(Mixer)

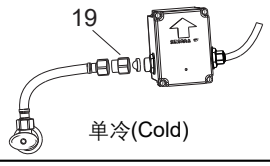

单冷(Cold)

INSTALLATION

How to Install the Faucet

1. Secure faucet on lavatory

Insert faucet soap hose (9)/wire (8) and inlet hose (7) through gasket (2), then seat gasket (2) in the groove on the underside of the faucet. Insert faucet soap hose (9)/wire (8) and inlet hose (7) through lavatory mounting hole, then insert gasket (3), tab (4) retainer (5) through soap hose (9)/wire (8), fasten retainer on stud as shown in the directions, Last, fasten two screws (6) on retainer, press tab (4) from the top of screws to secure the faucet.

2. Install Control Assy

Unscrew valve cover screw (11) with a screwdriver and open valve cover (10). Determine proper mounting location per rough –in (Fig 1), then punch expansion tube (13) in. Place valve box against the wall and then secure control valve assembly on the wall by bolts (14).

Note: Place the long end of control box upright, water outlet position shall be adjusted left/right based on requirements.

For mixture faucet, connect hose (16) one end to Tee inlet hose assembly (17), and then another end to control assembly (15) water inlet; connect water outlet marked with “water outlet hose” faucet outlet hose (8), Tee inlet hose assembly connect to another two ends with angle valve (18).

For cold water faucet, connect hose (16) one end to control assembly (15) filter (19), another end connect to angle valve, then connect control assembly outlet marked with “water outlet hose” to faucet outlet hose (8).

注意：

进水口处滤网组件不能漏装。

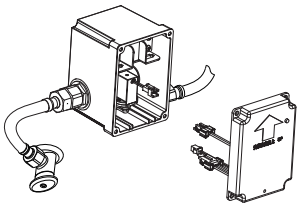

Note:

Ensure cylinder install on water inlet.

三 安装皂液器

1. 在墙壁合适的位置钻孔，打入膨胀管，再用螺钉将皂液器支架固定在墙壁上（见图1）。

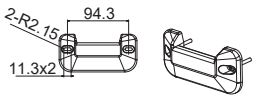

Fig.1
图1

2. 将皂液泵连带皂液瓶扣紧在支架上（见图2）。

3. 将龙头皂液软管连接到皂液泵上（见图3）。

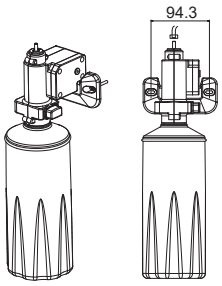

Fig.2
图2

Fig.3
图3

四 如何安装排水组件

旋下排水器盘片(22)，在其底面沿周围涂上一圈密封油灰。把排水本体(23)由底下插入面盆。

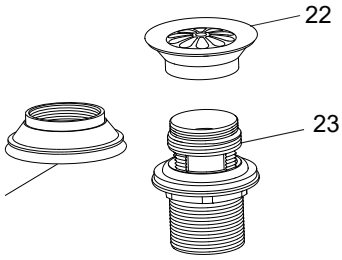

把排水器盘片(22)旋入排水本体(23)。从下方用手拧紧锁紧螺母(24)，去除多余的油灰。

注意： 在锁紧螺母(24)拧紧后，不可再调整排水本体的位置，否则将会破坏油灰密封。

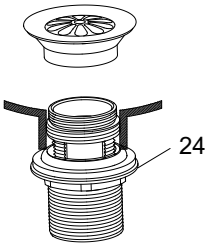

把尾管(25)接上存水弯(26)，尾管需插入存水弯25mm到55mm之间。

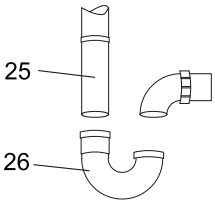

3. Install soap dispenser

1. Drill the mounting holes properly, place expansion tube, and then mount the soap dispenser on the wall by screws (Fig.1).

2. Mount soap dispenser pump and soap bottle on the bracket (Fig.2).

3. Connect faucet soap hose to soap dispenser pump (Fig.3).

4. How to Install the Drain

Unscrew the drain flange (22) from drain assembly. Apply plumbers putty around the bottom circle. Insert drain body (23) into lavatory from the underside.

Screw the drain flange (22) into drain body (23). Tighten the locknut (24) manually from the underside.
Note: Remove excessive putty. Note: after tightening locknut (24), do not adjust drain body position, otherwise putty seal might be damaged.

Connect the tailpiece(25) to the trap(26). The tailpiece should extend 25mm to 55mm into the trap.

五 连接电源和控制线

1. 将龙头电源线与控制盒对应接头连接并插紧（见图4）。

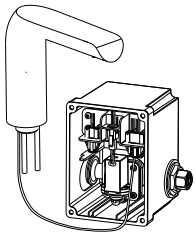

Fig.4
图4

2. 将皂液器电源线与控制盒对应接头连接并插紧（见图5）。

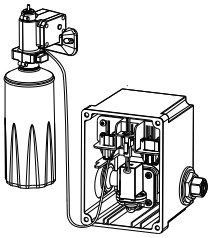

Fig.5
图5

3. 客户根据需要自备穿线管及连接线，建议交流电源线采用带绝缘护套层的电线，导体标称截面积≥0.5mm ^{2}。将图示从接线柱引出的线与交流电源线相连接(见图6)。

4. 接线完毕后，应检查并确保所有排、接线无误。盖上控制器盒盖，打开交流电源，使龙头进入工作状态。

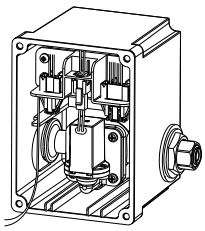

Fig.6
图6

六 添加皂液

1. 按下皂液瓶拆卸按钮，将皂液瓶向下拉，从皂液泵上拆下（见图7）。

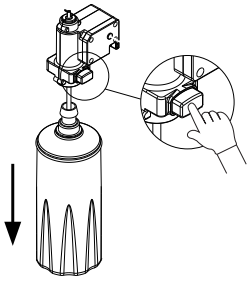

Fig.7
图7

2. 向皂液瓶内添加适用的粘度 1～3000MPa·s液体皂液。

3. 把皂液吸管插入皂液瓶内，将皂液瓶装复位并向上推，直到听到“咔嗒”声（见图8）。

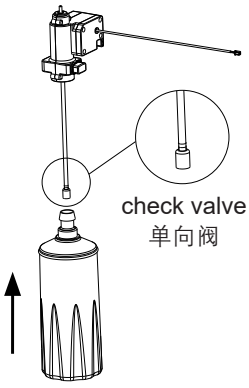

Fig.8
图8

4. 初次添加皂液后，按住控制盒盖上的按钮约2~3秒，直到皂液泵启动；皂液泵将工作一段时间后自动停止，将皂液瓶内的皂液抽取到龙头内。如果皂液没有从龙头流出，重复该步骤，直到皂液从龙头流出（见图9）。

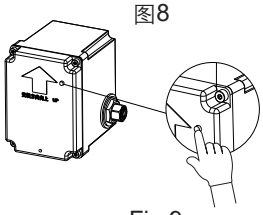

Fig.9
图9

5. Connect power supply and control wire

1. Connect and tighten faucet wire to corresponding connector on control box (Fig.4) .

2. Align soap dispenser wire to corresponding connector on control box and tighten properly (Fig.5).

3. Customer shall prepare proper wire hose and connecting wire. It is suggested that AC wire shall adopt insulated harness. The nominal cross-sectional area of conductor is ≥0.5mm^2. Connect wire from terminal to AC power cord as shown. (Fig.6).

4. After wiring work is completed, check ad ensure proper wiring and connection. Close control box cover and turn on AC power supply to activate faucet working status.

6. Replenish soap solution

1. Press soap dispenser dismantle button and pull soap container down, and remove from soap pump (Fig.7).

2. Refill applicable viscosity 1～3000MPa·s soap solution into the bottle.

3. Insert soap solution tube into the bottle, reset soap solution bottle and push forward until one “click” is generated (Fig.8).

4. Press button on control box cover for 2~3s after initial soap replenishment until soap pump activated; soap pump will auto stop after a period of time and the soap will be extracted to the faucet. If there’s no soap flow out from the faucet, repeat this step until soap flows out (Fig.9).

如何连接交流电源

HOW TO CONNECT AC POWER SUPPLY

一个交流电源供一个感应龙头

One AC Power supply one touchless faucet

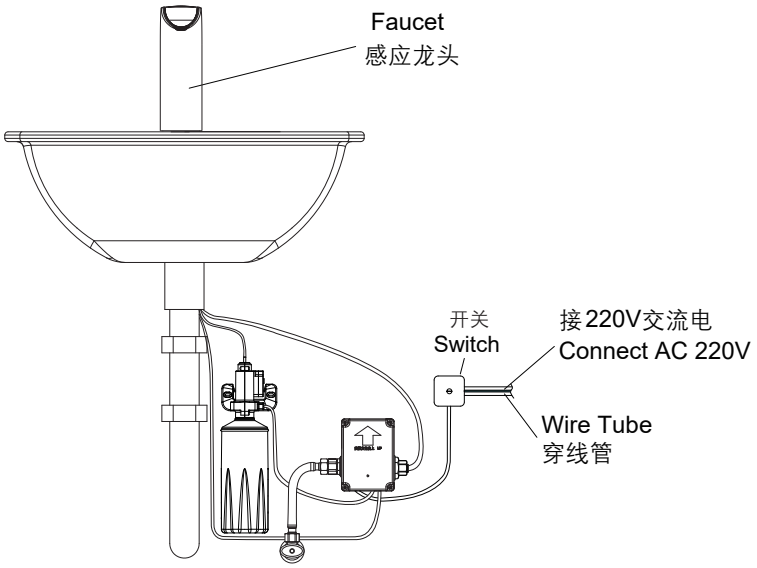

如何转换成混水感应龙头 (若用户另购三通进水软管组件1298745-SP）

HOW TO CHANGE TO A MIXING SENSOR FAUCET (If customerpurchases tee inlet assy. 1298745-SP)

冷热混水龙头水温调节：先关闭热水角阀，再将冷水角阀旋至冷水最大状态，再缓慢打开热水阀，以免烫伤。如冷水水压大，打开全部热水角阀后，仍无合适水温，请再缓慢减少冷水出水量，直至水温使用舒适。

⚠ 建议使用科勒推荐的三通进水软管组件，否则有冷热水互窜的风险。

Adjust the water temp for faucet with temperature mixture: turn off hot water valve first, and then turn on the water and adjust to full cold, slowly turn on hot water valve to avoid scalding. If cold water pressure is high and unable to gain proper comfortable water temp even hot water valve is fully open, turn down cold water capacity slowly until water temp is comfortable for use.

⚠ It is recommended to use Kohler TEE inlet hose assembly, otherwise there is a risk of cold and hot water mixing problem.

如何转换成恒温阀感应龙头 (若用户另购恒温阀16294T-3-CP, 具体安装详见其说明书)

HOW TO CHANGE TO A THERMOSTATIC SENSOR FAUCET (If users purchased the thermostatic valve 16294T-3-CP, please refer to the installation guide 16294T-3-CP)

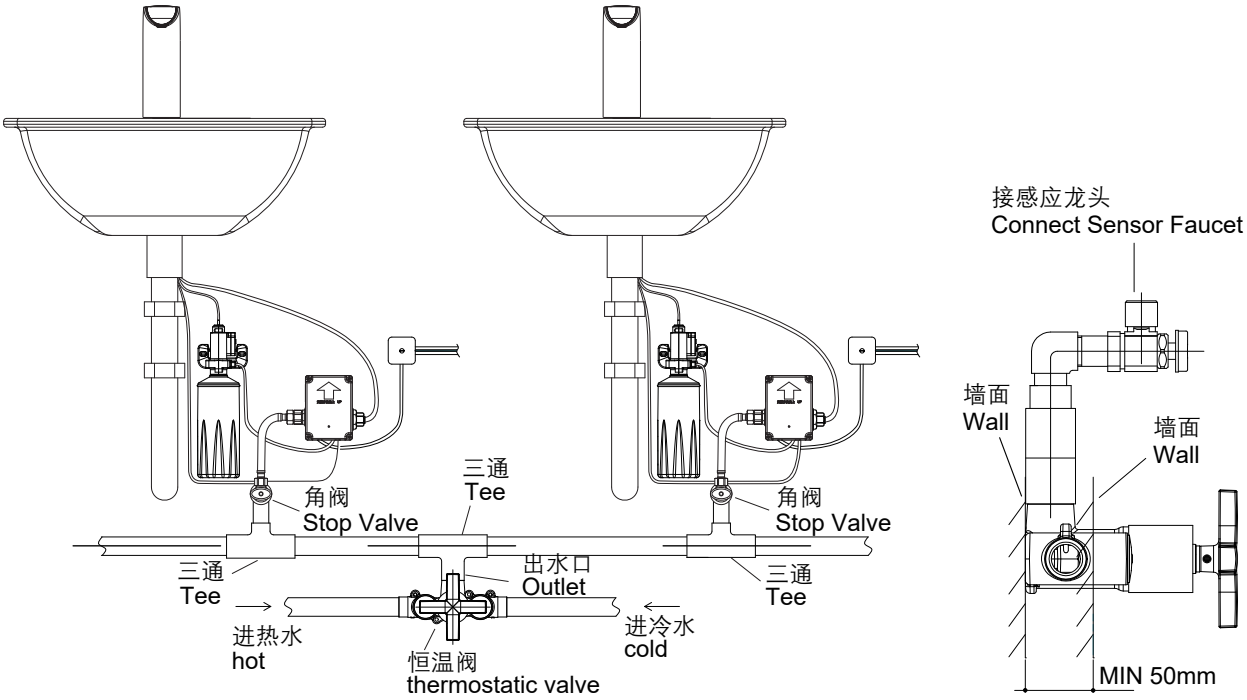

注：三通、角阀请用户自备。

Note: Please prepare the tee and stop valve accordingly.

安装结果检查

INSTALLATION CHECKLIST

检查并确保所有衔接处都已拧紧，打开排水系统和主要供水源，检查并修理有漏水的接口。

Check and ensure that all connections are tight. Open the drain. Turn on main water supply and check for leaks. Repair leakage when necessary.

清理说明

CLEANING INSTRUCTIONS

适用于所有加工处理过的表面，以中性肥皂水清洗龙头表面，再以干净的软布彻底擦干整个表面。许多清洁剂，比如氨水，去污粉及洁厕灵等，会对龙头表面造成伤害，切忌使用。

有腐蚀性的清洁剂或溶剂不可使用于科勒的水龙头及其配件上。

不能使用百洁布、钢丝球等硬质清洁材料擦拭龙头。或使用干的纸张擦拭，避免划伤龙头整体表面。

Applicable for all finishes: clean faucet surface with a mild soap, then wipe entire surface completely dry with a clean soft cloth. Most cleaners may contain chemicals, such as ammonia, chlorine, toilet cleaner etc. which could adversely affect the surface and it is not recommended for cleaning.

Do not use abrasive cleaners or solvents on Kohler faucets and fittings.

Do not wipe faucet with hard cleaning materials such as scrubbing pads, steel wool etc. or use dry paper to wipe faucet so to avoid scratching the surface.

用户须知 IMPORTANT CONSUMER INFORMATION

1. 超时出水控制

连续在感应状态下使用约一分钟，龙头自动止水。自动止水后，手或物体离开感应范围后，再次进入感应范围内，龙头正常工作，否则无反应。

1. Timeout setting

When the faucet flows continuously for 1 minute, the faucet will automatically stop.Objects must be removed from the sensing range. Then the water will flow when objects re-enter into the sensing range again. Otherwise, the faucet will not work.

2. 清洗过滤系统

该感应龙头的控制组件内已包含了过滤装置。如管内杂质过多或水质较差，长期使用会引起出水情况不良。请按以下步骤清洗过滤装置：

1. 关闭角阀。

2. 将控制组件进水口处软管拧下，取出滤网组件，用水冲洗完毕后，重新装入。

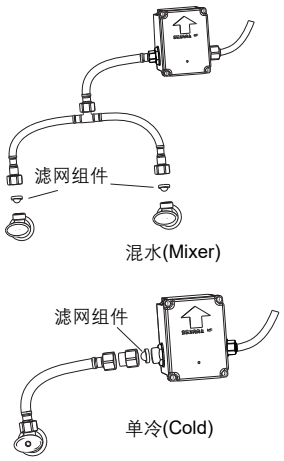

2. Clean the Filtration System

The touchless faucet control assembly include filtration device. Poor water outflow shall be caused by excessive impurities inside the hose or poor water quality after long time use. Please clean filtration device per following steps:

1.Turn off stop valve.

2. Pull hose from control assembly water inlet, take filter screen assembly out. Reinstall screen after clean by water.

3. 自动清洗存水功能

感应龙头长期处于不使用状态时，每间隔24小时自动冲水一段时间排出龙头内的存水。

如果想禁用该功能，可打开控制盒，将控制板上的跳线JMP1插在1-2位置。

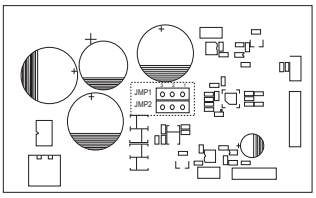

3. Self-Cleaning the stagnant water

When the faucet is no used for a long period of time, it will automatically flush to discharge the stagnant water inside the faucet every 24hrs.

If you want to disable this function, open the control box and plug JMP1 to 1-2 position on control board.

4. 自动清洗皂液功能

感应龙头长期处于不使用状态时，每间隔24小时自动出一次皂液，以防止皂液凝固堵塞皂液器。*

如果想禁用该功能，可打开控制盒，将控制板上的跳线JMP2插在1-2位置。

* 自动出皂后，自动出水冲洗面盆。

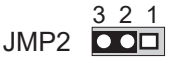

4. Auto liquid soap clean function

When sensor faucet is in idle for a long time, the liquid soap will be dispensed every 24hrs to prevent soap from solidification and cause the dispenser clog issue. *

If you want to disable this function, open the control box and plug JMP2 to 1-2 position on control board.

* Auto flush lavatory after auto liquid soap dispensing.

⚠ 在皂液用完前需及时向皂液瓶添加皂液，皂液泵不可长时间在无皂液情况下空转使用。

⚠ Refill soap solution before used up, soap solution pump shall not run idle without soap solution for a long time.

常见问题排除

现　象	原　因	处理方法
不出皂液 (面板有显示)	皂液用尽	添加皂液
	长时间未添加和使用皂液或皂液器管路堵塞	拆下皂液器单向阀(见图8)。清洗后重新装回皂液器 清洗皂液器管路 开启自动清洗皂液功能
	皂液器未连接好 初次安装后未手动抽取皂液	检查皂液器接线和软管 按安装步骤，用控制盒按钮手动控制皂液器抽取皂液
不工作 (面板不点亮,不出水和皂液)	无电源或接线有误(交流电)	检查总电源和接线情况
不出水 (面板有显示)	感应范围内有其它物体 感应窗口较脏 接线端未插好、插错 角阀关闭 过滤装置堵塞 起泡器堵塞	移开物体 清洁窗口 检查接线端 打开角阀 清洗过滤装置 清洗起泡器
出水量小	角阀是否彻底打开 起泡器堵塞 过滤装置堵塞 水压太低	打开角阀 清洗起泡器 清洗过滤装置 检查供水系统
约1分钟内 不止水	感应范围内有物体	移开物体 擦干感应窗口的残留水滴

如按以上操作仍未解除问题，请与销售商或科勒(中国)投资有限公司联系。

TROUBLE SHOOTING

Symptoms	Probable Causes	Corrective Action
No soap dispensed (Display on panel)	Soap used up	Replenish soap solution
	No soap solution filled into dispenser for a long time or clogged soap solution tube	Dismantle check valve on soap dispenser, clean and reinstall back to the soap dispenser (Fig.8) Clean soap dispenser pipeline Activate auto clean soap solution function
	Improper soap dispenser connection No manual soap solution extraction performed after initial installation	Inspect soap dispenser wiring and hose Press button on control box and manually extract soap solution according to installation steps
Deactivated (No display on panel, no water and soap flows)	No power supply or incorrect wire connection (AC)	Inspect general power and wiring condition
No water flows (Panel display)	Other objects within sensing range Dirty sensing window Improper or wrong terminal connection engagement Angle valve is closed Filter device is blocked Clogged foam soap cartridge	Remove objects Clean window Inspect terminal Open valve Clean filter Clean foam cartridge
Low flow	The stop valve is not open completely The Aerator is blocked The filter is blocked The supply water pressure is low	Open the angle valve Clean aerator Clean filter Check the water supply system
Water runs for longer than 1 minute without switching off	Object in sensing range	Remove object Clean residual water on the induction window

Please contact with distributor or Kohler China Investment Co., Ltd., if the trouble remains after above-mentioned actions are taken.

产品中有害物质含量的说明

回收提示

本产品超过使用期限或经过维修无法正常使用后，不应随意丢弃，请交由有废弃电器电子产品处理资质的企业处理，正确的处理方法请查阅国家或当地有关废旧电器电子产品处理的规定。

有害物质统计表

部件名称	有害物质名称					
	铅(Pb)	汞（Hg）	镉（Cd）	六价铬(Cr(VI))	多溴联苯(PBB)	多溴二苯醚(PBDE)
外壳组件	×	○	○	○	○	○
阀体组件	×	○	○	○	○	○
控制盒组件	×	○	○	○	○	○
*电池盒组件	○	○	○	○	○	○
*电池	○	○	○	○	○	○
*交流电源盒	○	○	○	○	○	○
*进水组件	×	○	○	○	○	○
附件类	○	○	○	○	○	○

本表格依据SJ/T 11364—2014的规定编制。

○ ：表示该有害物质在该部件所有均质材料中的含量均在GB/T 26572现行有效版本规定的限量要求以下。

× ：表示有害物质至少在该部件的某一均质材料中的含量超出GB/T 26572现行有效版本规定的限量要求。

* ：表示部分机型含有该部件。

注：本表格提供的信息是基于供应商提供的数据及科勒公司的检测结果。本产品应用环保设计理念，在当前技术水平下，所有有害物质或元素的使用已经控制到了最低程度，科勒公司会继续努力通过改善现有技术来减少这些物质的使用。

本产品的“环保使用期限”为10年，科勒公司根据产品设计特性指定该期限。只有在本产品使用说明书所述的正常情况下使用本产品时，“环保使用期限”才有效。

Description of Content of Hazardous Substances in Product

Reclaim Indication

When the product exceeds service life or is unable to use after repair, do not throw the product away in the normal trash. Please dispose the waste electronic parts through a qualified reclamation enterprise. Make sure the product is handled properly. Disposing of product must be done in accordance with the local or national government law.

Statistics of Contents of Toxic or Hazardous Substances or Elements

Part name	Toxic or Hazardous Substance or Elements					
	Lead (Pb)	Mercury (Hg)	Cadmium (Cd)	Hexavalent Chromium (Cr(VI))	Polybrominated biphenyls (PBB)	Polybrominated Diphenyl Ethers (PBDE)
Cover Assy.	×	○	○	○	○	○
Valve Assy.	×	○	○	○	○	○
Control Box Assy.	×	○	○	○	○	○
*Battery Box Assy.	○	○	○	○	○	○
*Battery	○	○	○	○	○	○
* AC Power Box	○	○	○	○	○	○
* Water Inlet Assy.	×	○	○	○	○	○
Accessories	○	○	○	○	○	○

This form is prepared in accordance with SJ / T 11364 .

○ : Indicates that the substance in the material composition is below the high limits of the current requirements in GB/T26572.

× : Indicates that at least one of the homogeneous substance in the material composition is below the high limits of the current requirements in GB/T 26572.

* : Indicate only partial product series contains this substance.

Note: the information provided is based on the supplier data and Kohler inspection results. The product is designed not to hurt the environment. Under current technology, all hazardous materials have been used in the smallest amounts possible. Kohler will strive to reduce the use of these hazardous materials used in this product.

The product “service life for environment protection” is 10 years; Kohler Company will specify product service life based on product characteristics. The product “service life for environment protection” is only effective when the product is used as described in the product specification.