KOHLER®

INSTALLATION INSTRUCTIONS
安装说明书

珂美
KUMIN
Desk-mount Sensor Faucet

K-18655H-NW-CP	珂美台盆感应龙头–单冷，1.9升 KUMIN DM SENSOR FCT COLD 0.5GPM
K-18655H-S3-CP	珂美台盆感应龙头–单冷，1.4升 KUMIN DM SENSOR FCT COLD 0.35GPM
K-18655H-S5-CP	珂美台盆感应龙头–单冷，1.0升 KUMIN DM SENSOR FCT COLD 0.26GPM

安装之前

所有的资料是按最新出版的产品资料编写而成。科勒公司保留任何时候不经通知即可改变产品特性、包装或产品可供类型的权利。

说明书包括重要的安装、保养及清洁方面的内容，请把这些资料交给用户阅读。

BEFORE YOU BEGIN

All information is based on the latest product information available at the time of publication. Kohler Co. reserves the right to make changes in product characteristics, packaging, or availability at any time without notice. Please leave these instructions for the consumer. They contain important information.

科勒（中国）投资有限公司
中国上海市静安区江场三路158号　邮编：200436
制造商：上海科勒电子科技有限公司
中国上海市宝山区丰翔路1955号　邮编：200444

注意事项

1. 一定要先彻底冲洗供水管以清除管道中的杂质，使用水源为自来水或可供饮用水。
2. 请勿将强力及冲击施于产品，以免造成故障，引起漏水。
3. 安装、清洁龙头时，切勿损伤感应窗口表面，以免造成故障。
4. 如果是安装新的洗面盆，可将水龙头和排水组件先安装好到面盆上。
5. 对于直流龙头， 安装时注意电池的正负极不能装反，电池盒盖要拧紧，防止电池受潮。
6. 对于交流龙头，安装时务必按照说明书的要求正确连接导线，龙头安装完毕后才可向电源盒供电。
7. 一个交流电源盒最多可供一个感应龙头。
8. 修理面盆时，用黑色电工胶布粘住感应窗口。
9. 维修交流龙头时，必须断开交流电源并关闭水源。

Notes:

1. Flush the water supply pipes thoroughly to remove debris. Faucet is designed for tap water or potable water.
2. Do not strike the faucet with rough strength to avoid being damaged.
3. Do not damage the surface of sensing window when installing or cleaning the faucet.
4. For new installations, install the faucet and drain to the lavatory before installing the lavatory.
5. As for DC type faucets, please pay special attention to insert direction match of battery poles. Tighten the battery cover completely to prevent its exposure to moisture.
6. As for AC type faucets, strictly follow indicated instructions to perform electric connection. Only provide electric supply to power box after the installation is completed.
7. One AC/DC transformer for max.one faucets.
8. Cover the sensing window with black tape when repairing lavatories.
9. Turn off the electrical source and shut down water supply before the faucets repaired.

使用说明 OPERATION INSTRUCTIONS

手伸到出水口下方感应范围内（感应距离随面盆、周围的情况而自动调节），水龙头出水。手离，0.5～1秒后，水龙头自动止水。

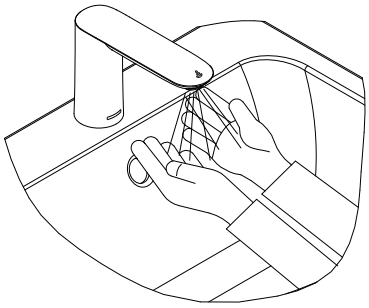

Put your hand in the sensing -range, the faucet should turn on. The faucet should turn off after removal within 0.5~2 seconds. The sensing distance will be adjusted automatically according to the condition of the lavatory and surrounding environment.

注意：
请勿将龙头安装在台面上，同时搭配台上盆。

Note:
please do not install the faucet on the table and match the washbasin

安装尺寸 ROUGH-IN DIMENSIONS

珂美台盆感应龙头(交流)
(单冷型)

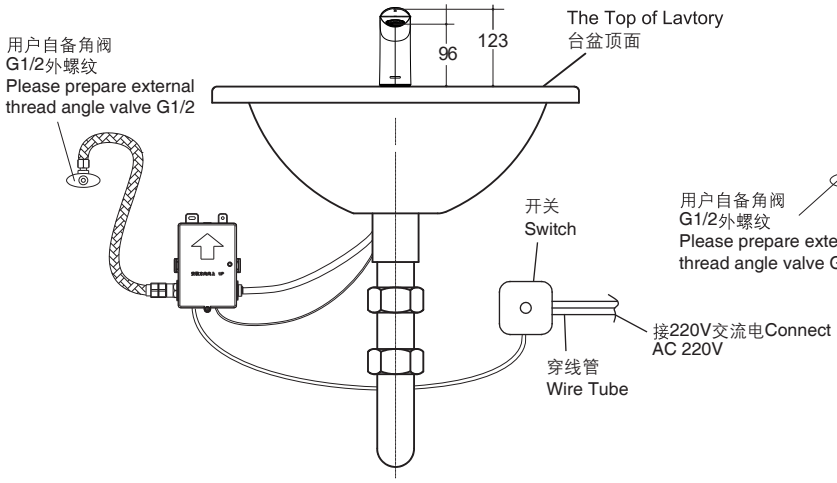

珂美台盆感应龙头(直流)
(单冷型)

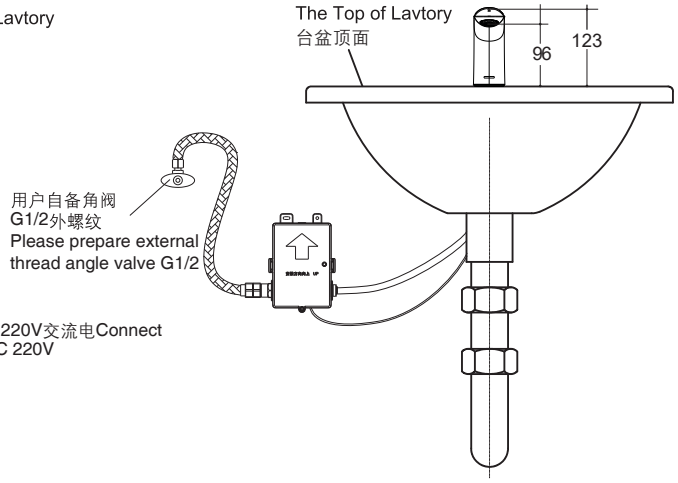

26845T-NA
AC/DC Transformer
交流电源盒

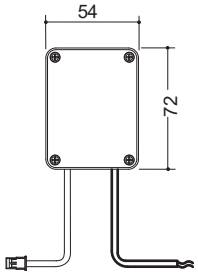

Output: DC6V
输出:
直流电压6V

Input: AC220V
输入:
交流电压220V

26844T-NA
DC Power Unit
直流电源盒

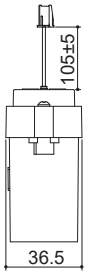

Output: DC6V
输出:直流电压6V

The Drain
排水组件

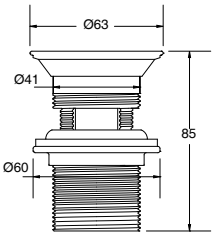

注：交/直流电源盒需另购。

NOTE: AC/DC transformer and DC power Unit need purchasing.

技术参数

电源：直流 4节5号碱性电池(LR06×4)
交流 电压220V，频率50/60Hz
检测时间：小于0.75秒
关阀延时：0.5～1秒
感应距离：自动调节
流量：水压为0.1MPa 时，流量不大于 2.0L/min
超时用水控制：超时用水1分钟，自动止水。
环境温度：1 ～55°C
进水温度：0.5～71°C
适用水压：0.05～0.86MPa

PARAMETERS

Power: DC 4 pieces of AA size alkaline batteries
AC 220V, 50/60Hz
Senser Duration: Less than 0.75s
Shut-off Delay: 0.5~1s
Sensing Distance: Automatic adjustment
Flow Rate: No more than 2.0L/min at 0.1MPa.
Overtime Flowing Control: Automatically stop flushing when the faucet senses an object for more than 1 minute continuously
Ambient Temperature: 1~55°C
Supply Water Temperature: 0.5~71°C
Supply Water Pressure: 0.05~0.86MPa

安装步骤

INSTALLATION

如何安装水龙头

一 龙头与面盆的安装固定

将固定螺杆(2)安装到水龙头(1)底部处。再把垫片(3)套在固定螺杆上。并嵌入水龙头底部的盘槽中。然后将电源线(7)和进水软管(8)穿过安装孔，从面盆下方将固定橡胶垫片(4)固定金属垫片(5)和固定螺母(6)对齐固定螺杆向上套入。调整水龙头电源线及进水软管的位置。用扳手拧紧固定螺母以便把水龙头固定在面盆上。

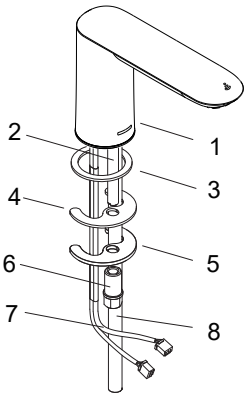

How to Install the Faucet

1. Secure faucet on lavatory

Install the stud (2) to the underside of the faucet (1). Slide the gasket (3) over the stud, and then seat the gasket in the groove on the underside of the sprout. Cross power cord (7) and water inlet hose (8) through mounting hole, slide rubber washer (4), metal washer (5) and nut (6) onto the stud from under the sink. Adjust faucet power cord and water inlet hose position, fasten nut to secure faucet on lavatory mounting surface by wrench.

2. 控制阀组件的安装固定

用螺丝刀拧松阀盒盖螺钉(11)，将阀盒盖(10)打开。根据安装尺寸图确定控制阀组件(9)安装位置，打孔，打入膨胀管(12)，使阀盒紧贴墙面再用膨胀螺钉(13)将控制阀组件固定在墙壁上，注意控制阀组件要与墙面保持平行。

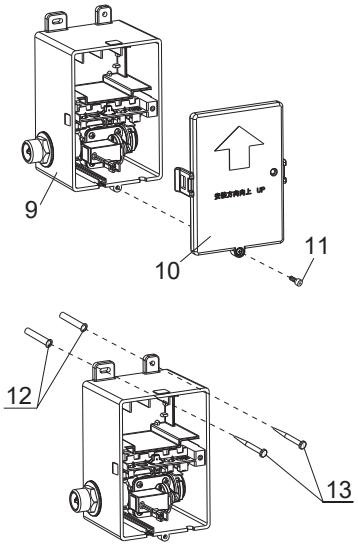

2. Fasten control valve assembly
Unscrew valve cover screws (11) by screwdriver, open valve cover (10). Determine control box assembly (9) installation location per rough-in; then drill holes, and punch plastic expansion tube (12) in. Place valve box against the wall and then mount control valve assembly on the wall by expansion screws (13). Keep control box assembly parallel to the wall.

将角阀(14)与管道出水口连接，再将软管(15)与角阀(14)连接，在软管(15)前放一水桶，将角阀(14)完全打开，打开供水系统，通水约一分钟，确认管道连接触无渗漏后，关闭供水系统。

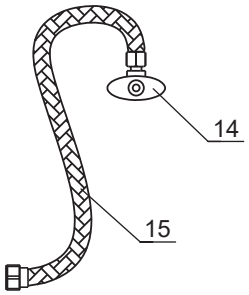

Connect check valve (14) to outlet, then connect the hose (15) to check valve (14). Put a bucket in the front of hose (15). Keep check valve (14) fully open, turn on the water supply for about 1 min, make sure no leakage on pipeline, and then turn off the water supply.

再将软管(15)与阀体进水口连接，然后连接阀体出水口与龙头组件出水软管(16)。

注意：

1. 请用户自备角阀。
2. 请勿将进水口与出水混淆。

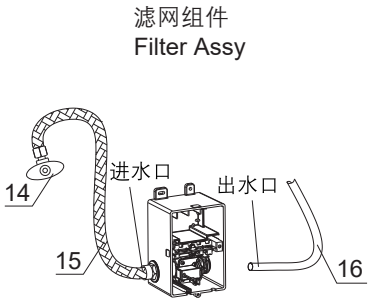

Then connect check valve (15) to valve outlet to faucet assembly water outlet hose (16).

Note:

1. Customer shall prepare check valve.
2. Do not mix water inlet with water outlet.

二 安装电源盒组件

Install power unit assembly

1.安装交流电源盒组件
Install AC power unit assembly

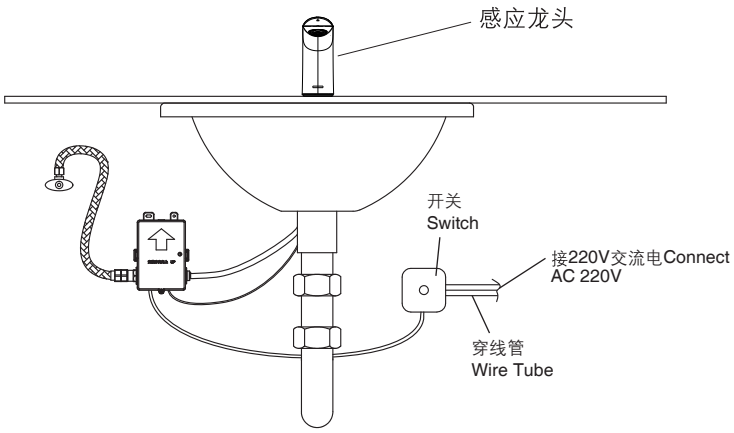

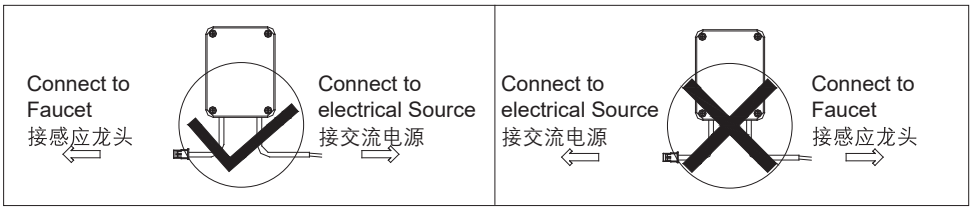

注意：禁止将交流AC220V接入直流DC接线端。

Note: Not allowed connect AC 220V electrical source to DC wire connector of AC/DC transformer

注：交流电源盒需另购。

Note: AC/DC transformer need to buy separately.

1.建议交流电源线采用带绝缘和护套层的电线，导体标称截面积≥0.5mm²；直流连接线采用导体标称截面积≥0.3mm²的电线。请严格按照上图进行连接。

2. 排线完毕后，应检查并确保所有排、接线无误，再分别连接电源盒AC接线端与排线管内交流接线端，以及电源盒DC接线端(黑橙线接头)与控制组件的电源线接插件（从阀盒内引出的电线）.最 后打开AC电源，龙头进入30秒自动调距阶段，此过程龙头不会出水。

1.Suggested wire: AC connection wire should with insulated protecting layer or sleeve and the section should be bigger than 0.5mm². The section of DC connection wire should be bigger than 0.3mm². The connection pattern must according to illustrations above.

2. After wire layout finished, check and repair if needed. Then connect AC connector of AC/DC transformer to electrical source from the control box, and DC connector of AC/DC transformer to control assembly. Turn on AC electrical power, faucet will be in the period of automatic adjusting sensing distance (about 30 seconds). The faucet will not work during this period.

2.安装直流电池盒组件
Install DC power unit assembly

1. 取出电池盒组件，旋松螺钉(17)，按电池盒盖(18)上的正负极标示装入4节5号电池，紧锁电池盒盖(18)的螺钉(17)后。

注意：电池极性不能装反，新旧电池不能混用。

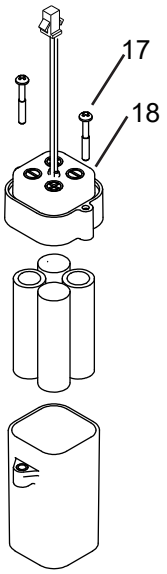

Install Batteries

1. Take out battery box assy., and loosen the screws(17). Place 4 "AAA" batteries into the battery box according to negative and positive pole mark on the cover of battery box(18). Tighten the screws on the cover of battery box (18). Please do not mistake the battery polar, and do not mix the new and used batteries together.

3.接线并固定控制盒组件
Cabling and fix the control box

1. 将交流或直流电源盒组件放入控制盒内。

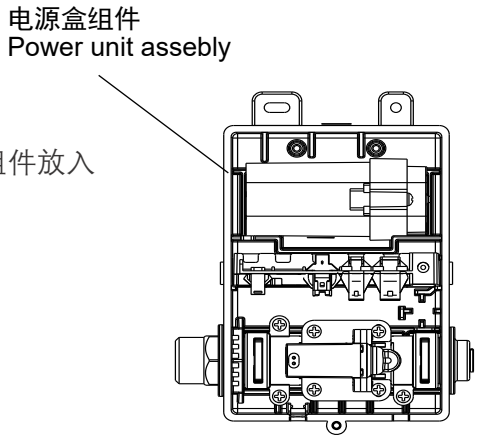

1. Assemble AC or DC power unit assembly into control box.

2.如图所示,将电源线,龙头感应器线及电磁阀线与相应的接线端相连接。然后整理好线束并锁紧控制盒盖。

2.Cabing and tidying wires such as power wire assembly,senor wires assembly and solenoid wire assembly to right position. Then lock the control box.

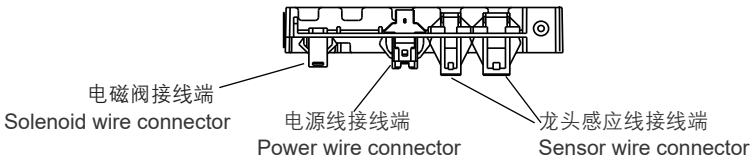

注：①为交流电源出线口，使用时，将①的卡扣（薄片状）去除，保证出线口光滑。

②为龙头感应器出线口。

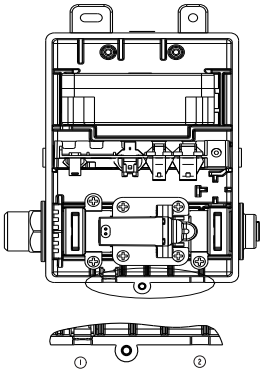

Note: ① is the outlet of AC power supply. Remove the clip (lamellar) during the process of use to ensure the smoothing of outlet.

② is the outlet of faucet sensor.

三 如何安装排水组件

How to Install the Drain

旋下排水器盘片(19)，在其底面沿周围涂上一圈密封油灰。把排水本体(20)由底下插入面盆。

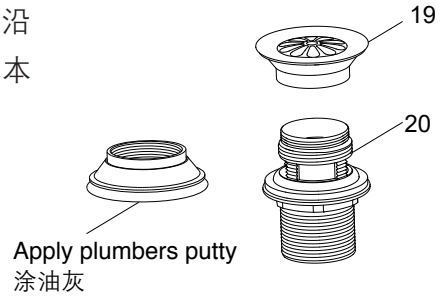

Screw off the drain flange (19) from drain. Apply a ring of plumbers putty around underside of the drain flange (19). Insert the drain body (20) into the lavatory from the underside.

把排水器盘片(19)旋入排水本体(20)。从下方用手拧紧锁紧螺母(21)，去除多余的油灰。

注意： 在锁紧螺母(21)拧紧后，不可再调整排水本体的位置，否则将会破坏油灰密封。

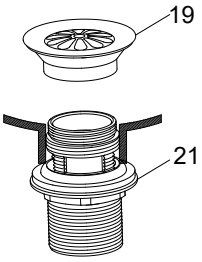

Thread the drain flange (19) onto the drain Body (20). Tighten the locknut (21) by hand from the underside of the fixture. Remove any excess putty.

Note: Do not try to change the position of the drain after the locknut (21) is tightened, or you may break the putty seal.

把尾管(22)接上存水弯(23)，尾管需插入存水弯25mm到55mm之间。

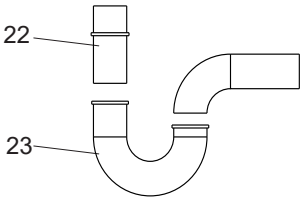

Connect the tailpiece (22) to the trap (23). The tailpiece should extend 25mm to 55mm into the trap.

如何转换成混水感应龙头 (若用户另购三通软管组件 1298745-SP)

HOW TO CHANGE TO MIXING SENSOR FAUCET (If users buy the tee hose assy 1298745-SP)

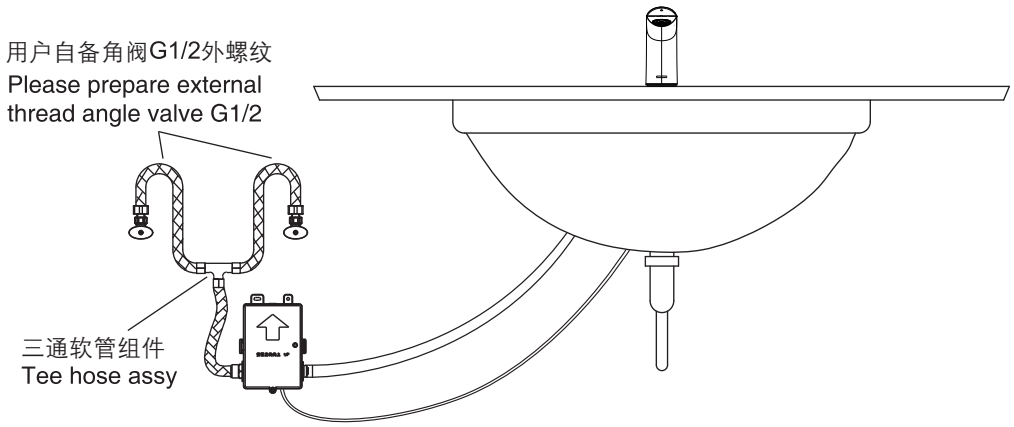

注：软管、三通请用户自备。

⚠ 建议使用科勒推荐的三通进水软管组件，否则有冷热水互窜的风险。

Note: Please let users prepare the hose and tee by themselves.

⚠ It is recommended to use Kohler TEE inlet hose assembly, otherwise there is a risk of cold and hot water mixing problem.

如何转换成恒温阀感应龙头 (若用户另购恒温阀16294T-3-CP, 具体安装详见其说明书)

HOW TO CHANGE TO THERMOSTATIC SENSOR FAUCET (If users buy the thermostatic valve 16294T-3-CP, the installation refer to the manual of 16294T-3-CP)

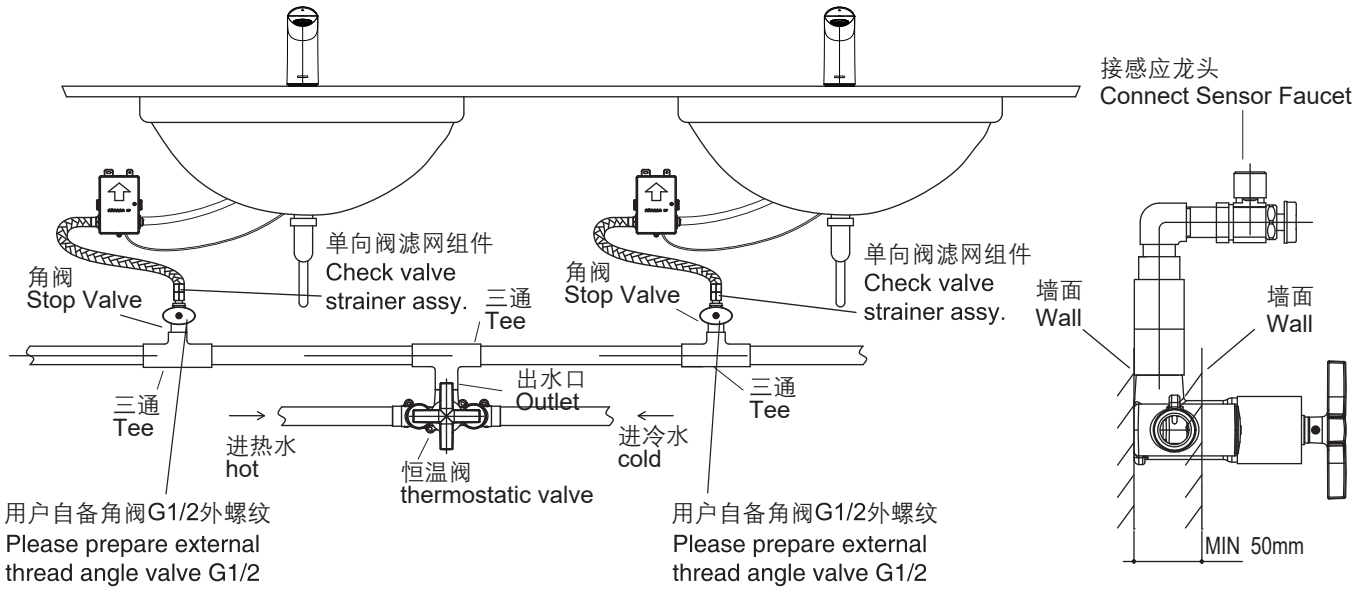

注：软管、三通、角阀请用户自备。

Note: Please let users prepare the hose、tee and check Valve by themselves.

安装结果检查

检查并确保所有衔接处都已拧紧，打开排水系统和主要供水源，检查并修理有漏水的接口。

INSTALLATION CHECKOUT

Check and ensure that all connections are tight. Open the drain. Turn on main water supply and check for leaks. Replace as required.

清理说明

适用于所有加工处理过的表面，以中性肥皂水清洗镀层表面，再以干净的软布彻底擦干整个表面。许多清洁剂，比如氨水，去污粉及洁厕灵等，会对电镀表面造成伤害，切忌使用。

有腐蚀性的清洁剂或溶剂不可使用于科勒的水龙头及其配件上。

CLEANING INSTRUCTIONS

All Finishes: Clean the finish with a mild soap and warm water. Wipe entire surface completely dry with a clean soft cloth. Many cleaners may contain chemicals, such as ammonia, chlorine, toilet cleaner etc. which could adversely affect the finish and are not recommended for cleaning.

Do not use abrasive cleaners or solvents on Kohler faucets and fittings.

用户须知

IMPORTANT CONSUMER INFORMATION

1. 感应指示灯的各种闪烁情况

感应指示灯是使用者了解感应龙头有效、唯一的途径。所以明白了感应指示灯闪烁所代表的含义，可以正确使用感应龙头，如图示:

(1) 快速闪烁，代表感应龙头正处于通电后的30秒自动调节阶段。期间，安装者、使用者不得干扰其自动调节，感应范围内不要放置物体。

(2) 间隔6秒钟闪烁一次（直流版本），表示电池即将使用完，请更换电池。

(3) 间隔2秒钟连续闪烁：若直流感应龙头，代表龙头电池耗尽，已停止工作，等待使用者更换电池；若交流感应龙头，表示为两种情况：一种为刚刚停电；另一种为在交流供电正常的情况下，则电源盒直流接线端接触不良。

(4) 在正常工作情况下，当有物体被感应时，龙 头出水，感应指示灯闪烁一次。（龙头关闭，感 应指示灯不闪烁。）

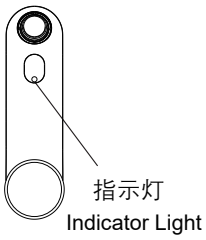

1. Note of the Indicator Flashing

The indicator is the only and effective way to learn the faucet's working conditions. So the users can use the sensor faucet correctly with knowing the meaning of the sensor indicator's flashing.

(1) Fast flashing means the faucet is in the period of adjusting sensing distance after power on for 30s. During these 30s, please do not put objects in the sensing range.

(2) The indicator flashes every 6 seconds (DC type) indicates that the unit is out of battery and has stopped working. Replease batteries.

(3) The indicator flashes every 2s: as for DC type faucets, this indicates the unit is out of battery and ceases working. Please replace batteries. For AC faucet, it indicates two possibilities: one is that the unit is out of battery; or poor DC terminal contact under normal AC power supply.

(4) In normal condition, the water will flow and the indicator will flash one time when objects are inducted. (The indicator does not flash when faucet stops flowing.)

2. 超时出水控制

连续在感应状态下使用约一分钟，龙头自动止水。自动止水后，手或物体离开感应范围后，再次进入感应范围内，龙头正常工作，否则无反应。

2. Overtime Flowing Control

When the faucet works for about 1 minute continuously, the water will be shut off automatically. After that, objects must be removed from the sensing range. Then the water will flow when objects go into the sensing range again. Otherwise, the faucet will not work.

3. 清洗过滤系统

该感应龙头的阀体组件内已包含了优良的过滤装置。如管内杂质过多或水质较差，长期使用会引起出水情况不良。请按以下步骤清洗过滤装置：

(1) 关闭角阀。

(2) 将主阀体组件取下，拿出滤网，用水冲洗完毕后，重新装入。注意：在清洗完滤网后，不要遗失平垫。

3. Clean the Filtration System

The faucet includes connector assembly with high quality filtration system. If there is a lot of debris in the supply pipes or the quality of water is bad, it will cause the flow in bad condition. Please clean th filtration system as following steps:

(1) Close the angle valve.

(2) Remove the valve assembly and take out the filter for cleaning, then re-install it.
Notice: Make sure to install the filter washer after cleaning the filter.

4. 自动清洗存水功能

感应龙头长期处于不使用状态时，
每间隔24小时自动冲水一段时间
排出龙头内的存水。

4. Self-Cleaning the stagnant water

When the faucet is no used for a long period of time, it will automatically flush to discharge the stagnant water inside the faucet every 24hrs.

常见故障排除

以下部分故障现象可通过指示灯闪烁情况识别。（参考“感应指示灯的各种闪烁情况”）

现　象	原　因	处理方法
不出水 （感应指示灯不闪烁）	无电池或电池装反(直流电) 无电源或接线有误(交流电) 感应范围内有其它物体 感应窗口较脏 接线端未插好、插错	检查电池 检查总电源和接线情况 移开物体 清洁窗口 检查接线端
感应指示灯每2秒快速闪烁1次而不出水	电池耗尽(直流电) 刚刚停电(交流电) 直流或交流接线端接触不良	更换电池 检查总电源 重新连接接插件
感应指示灯闪烁 不出水	刚装机完毕 阀体组件关闭 起泡器脏堵 过滤装置堵塞	等待 30秒 打开阀体组件 清洗起泡器 清洗过滤装置
感应指示灯闪烁 出水量小	阀体组件是否彻底打开 过滤装置堵塞 起泡器脏 水压太低	用内六角扳手逆时针旋转阀体组件的调节螺栓 清洗过滤装置 清洗起泡器 检查供水系统
约一分钟以内不止水 （感应指示灯不闪烁）	感应范围内有物体	移开物体
软管与阀体连接处漏水	进水软管连接处不光滑	平整切除连接处不光滑进水管 (1cm左右)

如按以上操作仍未解除故障，请与销售商或科勒(中国)投资有限公司联系。

除安装更换电池外，请勿随意拆卸龙头其它部件。

TROUBLE SHOOTING

Some trouble symptoms can be identified by the indicator's flashing. （Refer to "Note of the Indicator Flashing"）

Symptoms	Probable Causes	Corrective Action
No water flow (Indicator not flashing)	No battery or wrongly connected No power supply or wrong connection Object in sensing range Dirt on the sensing window The connector does not connect well	Check the batteries Check the power supply and the conncetion Remove the object Clean the sensing window Check the connector
The indicator flashes once every 2 seconds and the water doesn't flow out.	Batteries are out of power Just power cut DC or AC connector of AC/DC transformer may not connect well	Replace batteries Check the power supply Reconnect the connector
No water flow while the indicator flashes	Just finishing installation The connector assemblies are closed Aerator is blocked The filter is blocked	Wait for 10 minutes Open the connector assemblies Clean the aerator Clean filter
Low water flow while the indicator does not flash	The connector assemblies are not open completely The filter is blocked Aerator is dirty The supply water pressure is lower	Turn counterclockwise the adjustment bolts on connector assemblies with the hex wrench Clean filter Clean the aerator Check the water supply system
Keep water out within 1 minute. while indicator does not flash	Object in sensing range	Remove object
Leakage happened from the connection of inlet hose and valve.	The connection of inlet hose may not smooth.	Cut the inlet hose flat and smooth(about 1cm)

Please contact with distributor or Kohler China Investment Co., Ltd., if the trouble remains after above-mentioned actions are taken.
Please do not disassembly the other parts of the faucet freely except installing and replacing batteries.

产品中有害物质含量的说明

回收提示

本产品超过使用期限或经过维修无法正常使用后，不应随意丢弃，请交由有废弃电器电子产品处理资质的企业处理，正确的处理方法请查阅国家或当地有关废旧电器电子产品处理的规定。

有害物质统计表

部件名称	有害物质名称					
	铅(Pb)	汞（Hg）	镉（Cd）	六价铬(Cr(VI))	多溴联苯(PBB)	多溴二苯醚(PBDE)
外壳组件	×	○	○	○	○	○
阀体组件	×	○	○	○	○	○
控制盒组件	×	○	○	○	○	○
*电池盒组件	○	○	○	○	○	○
*电池	○	○	○	○	○	○
*交流电源盒	○	○	○	○	○	○
*进水组件	×	○	○	○	○	○
附件类	○	○	○	○	○	○

本表格依据SJ/T 11364—2014的规定编制。

○ ：表示该有害物质在该部件所有均质材料中的含量均在GB/T 26572现行有效版本规定的限量要求以下。

× ：表示有害物质至少在该部件的某一均质材料中的含量超出GB/T 26572现行有效版本规定的限量要求。

* ：表示部分机型含有该部件。

注：本表格提供的信息是基于供应商提供的数据及科勒公司的检测结果。本产品应用环保设计理念，在当前技术水平下，所有有害物质或元素的使用已经控制到了最低程度，科勒公司会继续努力通过改善现有技术来减少这些物质的使用。

本产品的“环保使用期限”为10年，科勒公司根据产品设计特性指定该期限。只有在本产品使用说明书所述的正常情况下使用本产品时，“环保使用期限”才有效。

Description of Content of Hazardous Substances in Product

Reclaim Indication

When the product exceeds service life or is unable to use after repair, do not throw the product away in the normal trash. Please dispose the waste electronic parts through a qualified reclamation enterprise. Make sure the product is handled properly. Disposing of product must be done in accordance with the local or national government law.

Statistics of Contents of Toxic or Hazardous Substances or Elements

Part name	Toxic or Hazardous Substance or Elements					
	Lead (Pb)	Mercury (Hg)	Cadmium (Cd)	Hexavalent Chromium (Cr(VI))	Polybrominated biphenyls (PBB)	Polybrominated Diphenyl Ethers (PBDE)
Cover Assy.	×	○	○	○	○	○
Valve Assy.	×	○	○	○	○	○
Control Box Assy.	×	○	○	○	○	○
* Battery Box Assy.	○	○	○	○	○	○
* Battery	○	○	○	○	○	○
* AC Power Box	○	○	○	○	○	○
* Water Inlet Assy.	×	○	○	○	○	○
Accessories	○	○	○	○	○	○

This form is prepared in accordance with SJ / T 11364 .

○ : Indicates that the substance in the material composition is below the high limits of the current requirements in GB/T26572.

× : Indicates that at least one of the homogeneous substance in the material composition is below the high limits of the current requirements in GB/T 26572.

* : Indicate only partial product series contains this substance.

Note: the information provided is based on the supplier data and Kohler inspection results. The product is designed not to hurt the environment. Under current technology, all hazardous materials have been used in the smallest amounts possible. Kohler will strive to reduce the use of these hazardous materials used in this product.

The product “service life for environment protection” is 10 years; Kohler Company will specify product service life based on product characteristics. The product “service life for environment protection” is only effective when the product is used as described in the product specification.