Mira Sport Dual Outlet Shower Fittings

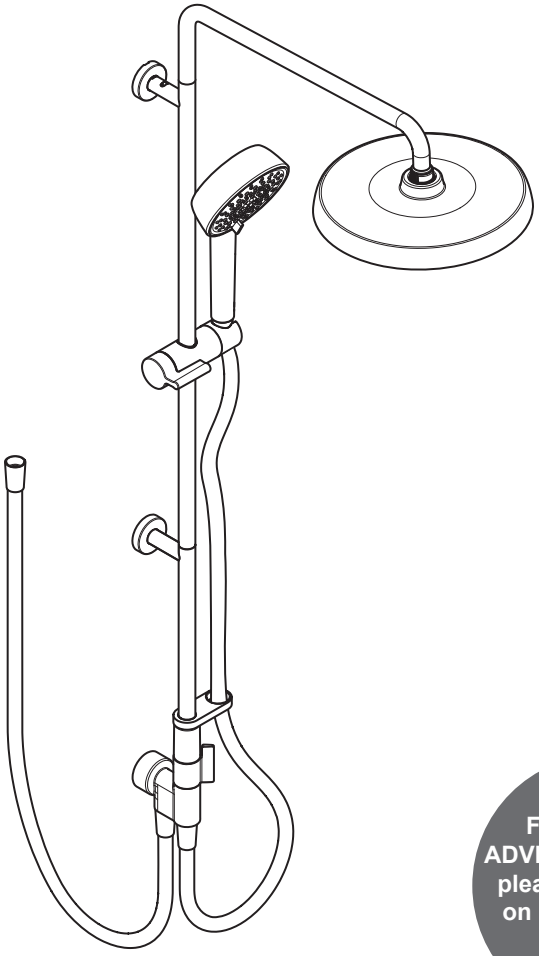

For SPARES, ADVICE or REPAIRS please call us free on 0800 001 4040 (UK only)

These instructions must be left with the user

Installation and User Guide

Showering perfection

mira SHOWERS

Introduction

Thank you for choosing a Mira showers. To enjoy the full potential of your new shower fittings, please take time to read this guide thoroughly, and keep it handy for future reference.

Guarantee

Mira Showers guarantee this product against any defect in materials or workmanship for a period of **one** year for the shower fittings, and **two** years for the diverter. This is effective from the date of purchase.

Failure to follow the instructions provided with the shower fittings will invalidate the guarantee.

For Terms and Conditions refer to the **'Customer Service'**.

Recommended Usage

Domestic	✓
Light Commercial	×
Heavy Commercial	×
Healthcare	×

These fittings are designed for use with Mira showers only.

Patents and Design Registration

Design Registration	6233204, 6233205, 6233206, 6233207, 6233208, 6233209, 6233210, 6233211, 6233200, 6233201, 6233202, 6233203, 6233197, 6233198, 6233199
Patents	GB: 2 612 395, 2 466 504
Patent Application	2213874.7

Pack Contents

Non-Airboost Version

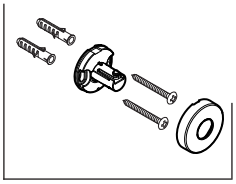

2 x Wall Fixing

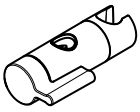

1 x Clamp Bracket



1 x Hose Retaining Ring

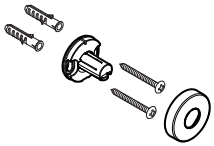

1 x Lower Bar

Note: Shorter lower bar is available as an accessory.

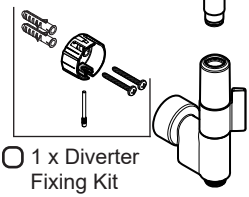

1 x Diverter Fixing Kit

1 x Diverter Assembly

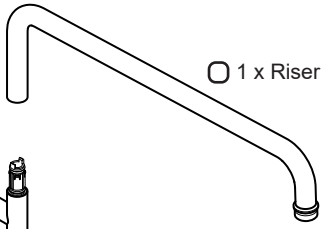

1 x Riser Arm

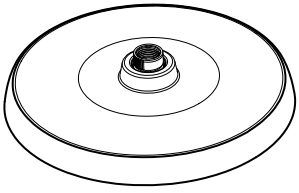

1 x Overhead



1 x Middle Bar

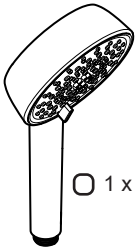

1 x Showerhead Multimode

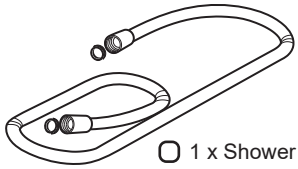

1 x Shower Hose

2 x Hose Seal

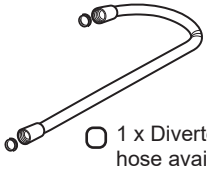

1 x Diverter Hose 1.0 m (Longer 1.2 m hose available as an accessory)

2 x Hose Seal

1 x Installation Template



Pack Contents

Airboost Version

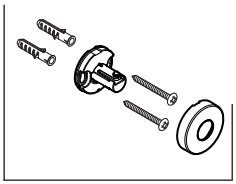

2 x Wall Fixing

1 x Riser Arm

1 x Middle Bar

1 x Installation Template



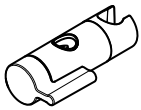

1 x Clamp Bracket

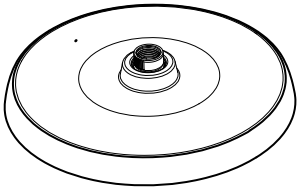

1 x Overhead



1 x Hose Retaining Ring

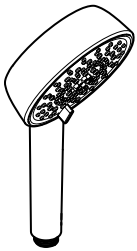

1 x Showerhead
Multimode

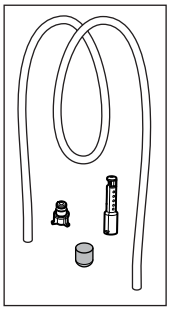

1 x Air Pipe with separate Yellow Assembly Aid, Connector and Diffuser

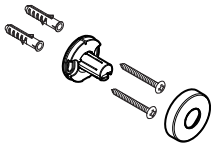

1 x Lower Bar

Note: Shorter lower bar is available as an accessory.

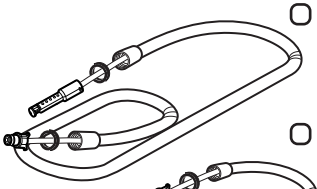

1 x Shower Hose with Air Pipe, Connector and Diffuser

2 x Hose Seal

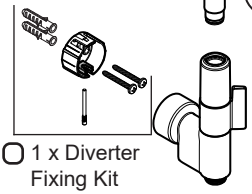

1 x Diverter Fixing Kit

1 x Diverter Assembly

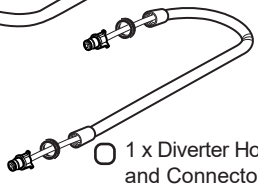

1 x Diverter Hose 1.0 m with Air Pipe, and Connectors (Longer 1.2 m hose available as an accessory)

2 x Hose Seal

General

Please read the important safety information and the operation section of this guide before using the shower fittings. Failure to follow the instructions provided with this shower fittings will invalidate the guarantee.

1. Installation of the shower fittings must be carried out in accordance with these instructions by qualified, competent personnel. Read all instructions for products being used in conjunction with these fittings.
2. The plumbing installation must comply with all national or local water regulations and all relevant building regulations, or any particular regulation or practice specified by the local water supply company.
3. A water treatment device should be installed where the water hardness may exceed 200 ppm. Malfunctions caused by excessive limescale formation are not covered by this shower's guarantee (see back page for details).
4. The showerhead should be positioned so that it discharges down the centre line of the bath or across the opening of a shower cubicle. The finished position of the overhead shower should also be considered to prevent water spraying directly on to the shower unit. The showerhead must be directed away from the shower unit, during normal use the showerhead must not spray directly on to the shower unit.
5. **DO NOT** fit any form of flow control in the outlet pipe work if the shower fittings are installed in conjunction with a product that requires the fittings to act as a vent (e.g. an electric shower).
6. **DO NOT** use excessive force when making connections.
7. Avoid layouts where the shower hose will be sharply kinked. This may reduce the life of the hose.
8. Special consideration should be given to the fixing arrangements when installing onto a dry lined, stud partition, shower cubicle or laminated panel wall structures. Installers may wish to obtain alternative proprietary cavity fixings, or choose other options, however, these methods of fixing are beyond the scope of this guide.

9. **DO NOT** install the shower or fittings where they may be exposed to freezing conditions.
10. The position of the shower fittings must provide a minimum air gap of 25 mm between the showerhead and the spill over level of any bath, shower tray or basin. There must be a minimum distance of 30 mm between the showerhead and the spill over lever of any toilet, bidet or other appliance with a Fluid Category 5 backflow risk.

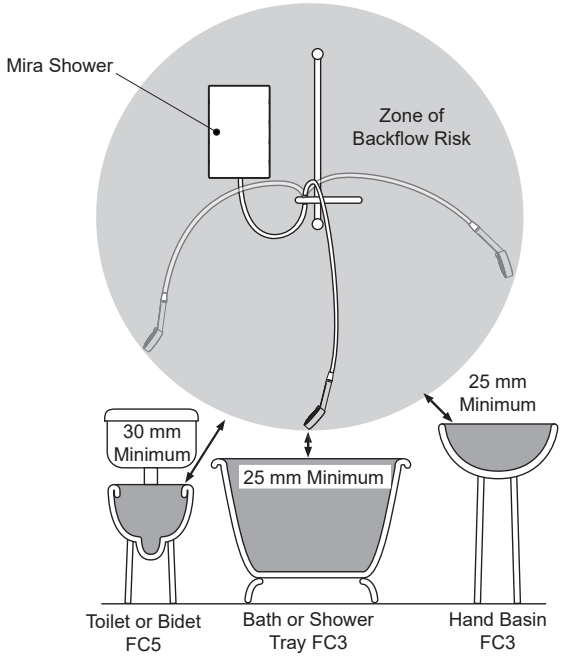

Hose retaining ring fitted and shower fittings fixed at a suitable height preventing dirty water backflow

Note: There will be occasions when the hose retaining ring will not provide a suitable solution for Fluid Category 3 installations, in these instances an outlet double check valve must be fitted, this will increase the required supply pressure typically by 10kPa (0.1 bar). Double check valves fitted in the inlet supply to the appliance cause a pressure build up, which affect the maximum static inlet pressure for the appliance and must not be fitted. For Fluid category 5 double check valves are not suitable.

Important Safety Information

1. These fittings can be used by all children and persons with reduced physical, sensory, or mental capabilities or lack of experience and knowledge if they have been given supervision or instruction concerning use of them in a safe way and understand the hazards involved.
2. Children shall not be allowed to play with the shower.
3. Cleaning and user maintenance shall not be made by children without supervision.
4. The showerheads must be descaled regularly. Any blockage of the showerheads or hose can cause damage to the shower.
5. **DO NOT** change the handset and overhead model. Fit only shower heads recommended by Mira and do no fit any additional device to restrict the water outlet flow.
6. **Caution!** Always check the water temperature is safe before entering the shower.
7. Ensure all instructions on correct hose and their connections are followed.
8. **DO NOT** hang anything on the hoses as this can cause premature failure due to kinking.
9. **DO NOT** connect the outlet of the shower to any tap, control valve, trigger operated handset or showerhead other than those specified for use with this shower as the outlet acts as a vent for the tank body. Only Kohler Mira recommended accessories should be used.
10. When adjusting the handset mode, point the handset away from body and make sure that the water temperature has stabilised before continuing to shower.

Installation

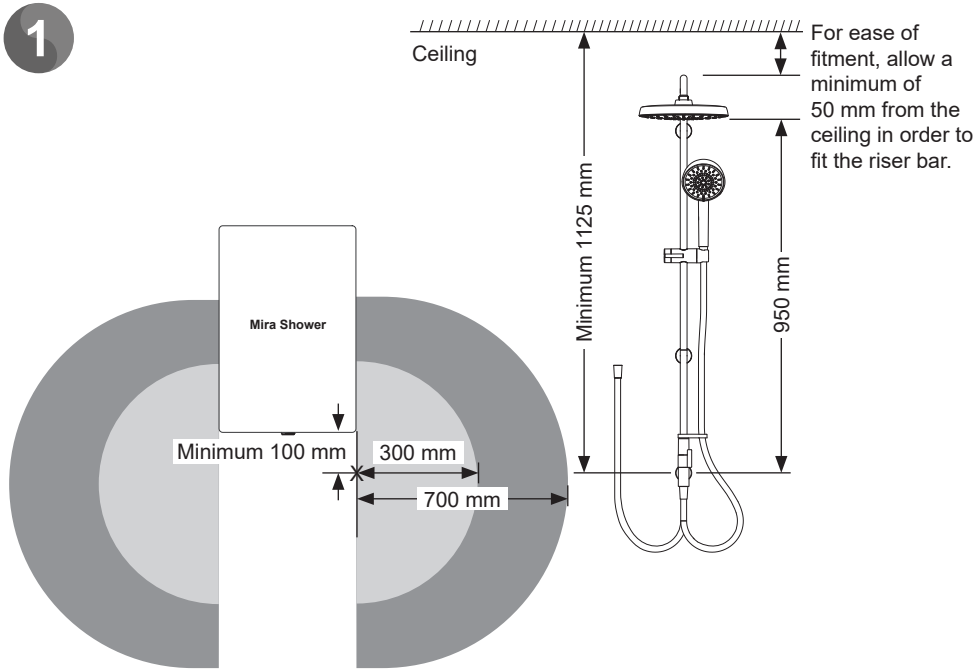

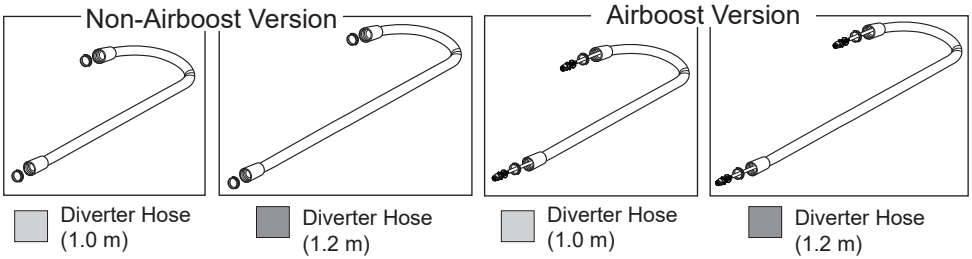

If the diverter is positioned outside of the light grey area as shown in the diagram a longer link hose is available up to 1.2 metre maximum in length.

Note: Ensure the position of the diverter valve for the dual head product allows for easy connection of the short supplied hose and the overhead is at a suitable height for all users. The diverter should be positioned at least 100mm minimum below the bottom of the shower and within the grey area to ensure the link hose is not kinked or under any strain.

Note: The dual outlet shower diverter that comes with this product is designed specifically for Mira showers. DO NOT fit any other type of diverter to an electric showers.

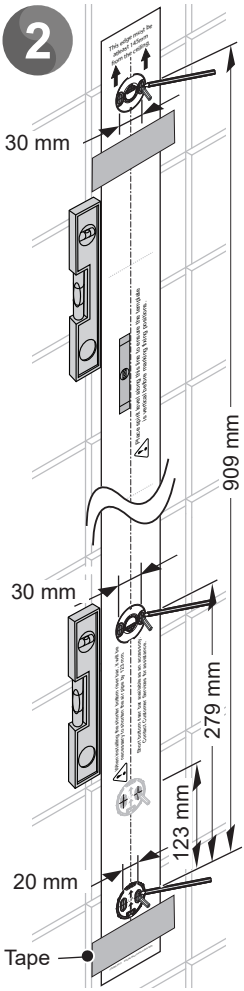

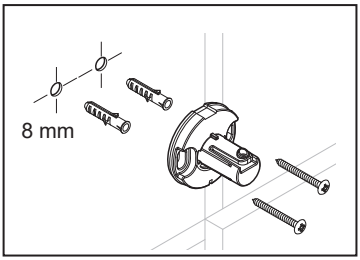

Upper Riser Fixing Bracket

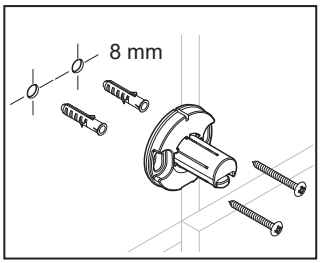

Lower Riser Fixing Bracket

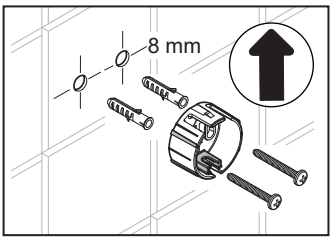

Diverter Fixing Kit

Important! Short bottom riser bar is available as an accessory. Contact Customer Services for assistance.

Important! DO NOT allow the overhead or handset spray water directly on to an electric shower. The overhead and handset must be positioned so this does not occur.

We recommend that the diverter wall plate should be installed not more than 0.3 metre away (Refer to image on page 8) (this is to ensure that the shorter interconnecting hose can be connected) from shower outlet.

Note: A special longer 1.2 metre hose is available as a spare part if the position of the shower fittings cannot be installed as shown. Contact Mira Customer Service.

Position the installation template to the desired location on the wall and secure with the tape.

Note: Use a spirit level to ensure the installation template is vertical.

Mark and drill the wall fixing positions for diverter wall plate and riser bar fixing brackets (Ideally this should be in the centre of a tile and not on a grout line.). When drilling the tiles ensure this is done in the middle or towards the bottom of the marked slots.

Caution! DO NOT drill into cables or pipes in the wall.

Insert the wall plugs and secure the diverter wall plate and riser bar fixing brackets using the screws supplied.

For Airboost version, continue directly to the **Airboost Version** section.

Non-Airboost Version

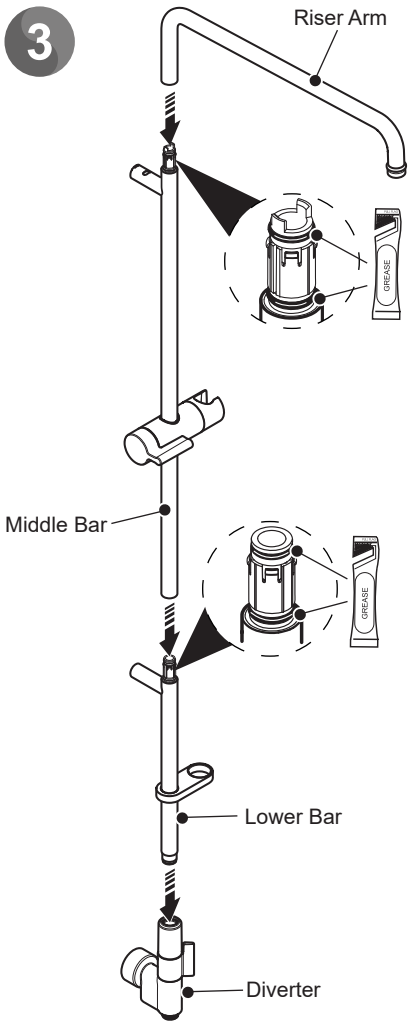

Apply a small amount of grease (supplied) to the two seals on middle and lower bar to aid installation.

Note: Ensure that both seals are in place for each joint.

Push fit the riser arm to the middle bar section.

Slide the clamp bracket.

Push fit the lower bar to the middle bar section.

Slide the hose retaining ring onto the lower bar section.

Install the riser bar assembly into the diverter. Make sure that the lower bar is pushed fully into the diverter to engage the seal.

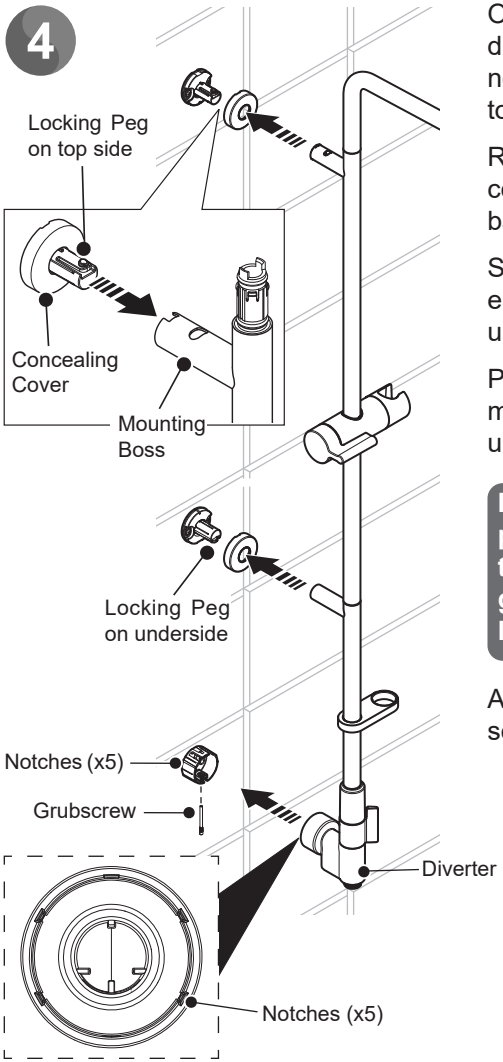

Offer the riser bar assembly and the diverter to the three wall fixing brackets. If necessary, adjust the wall bracket position to the correct places.

Remove the riser bar assembly and fit the concealing covers onto each of the riser bar wall brackets.

Slide the diverter over the wall plate ensuring the notches in the diverter lines up with the notches on the wall plate.

Push the lower bar and middle bar mounting boss onto the wall fixing brackets until it clicks into place.

Important! Ensure that the locking peg clicks in and is fully engaged in the hole in the mounting boss. Pull gently on riser bar to confirm the locking pegs are engaged.

Assemble the grubscrew (shown) to secure the diverter.

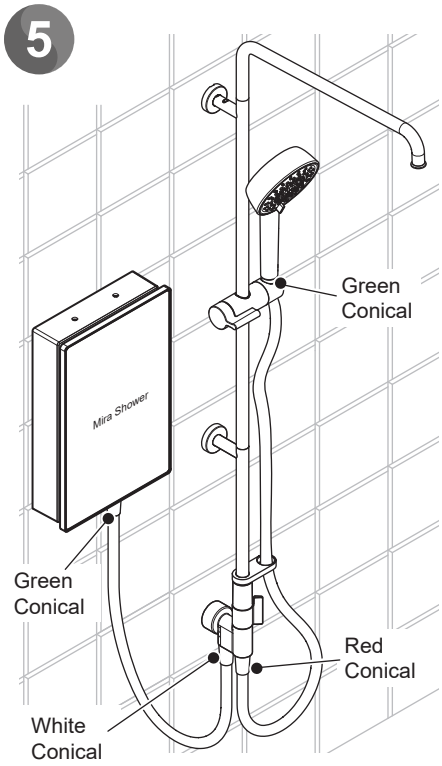

Connect the Diverter Hose Link (1.0m):

Important! Connect the white conical end (with unique thread) to the diverter inlet. Connect the green conical end (with standard thread) to the shower outlet.

If the diverter link hose is not long enough for your installation, please Contact Mira Customer Service to receive a longer hose.

Note: DO NOT hang products from the diverter link hose.

Connect the Shower Hose:

Connect the red conical end to the diverter outlet. Feed the green conical end through the hose retaining ring and connect to the showerhead.

Place the showerhead assembly into the clamp bracket.

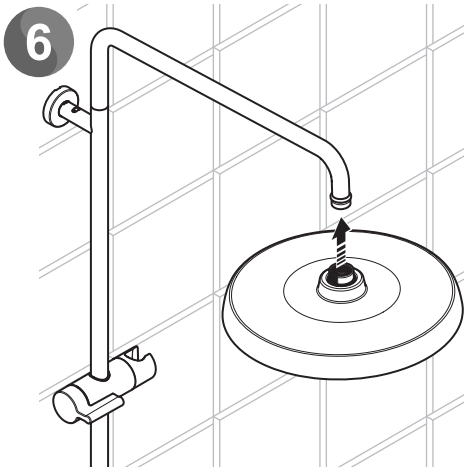

Screw the fixed shower head onto the riser arm.

Important! Before using your new fittings please make sure to commission the shower following the manufacturers instructions.

Continue directly to **Operation** of the shower fittings**.**

Airboost Version

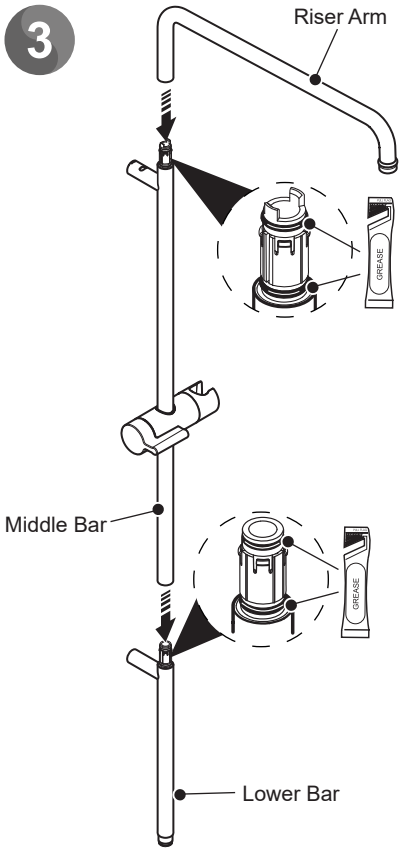

Apply a small amount of grease (supplied) to the two seals on middle and lower bar to aid installation.

Note: Ensure that both seals are in place for each joint.

Push fit the riser arm to the middle bar section.

Slide the clamp bracket on to the middle bar.

Push fit the lower bar to the middle bar section.

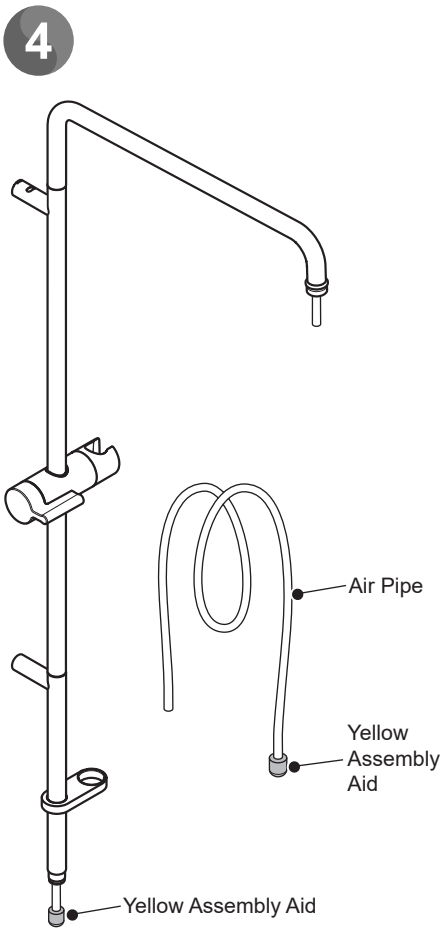

Place the yellow assembly aid on one end of the air pipe.

Insert the air pipe into the top outlet of the riser bar assembly.

Feed the air pipe downwards through the riser bar assembly.

When installing the shorter bottom riser bar, it will be necessary to shorten the air pipe by 120 mm.

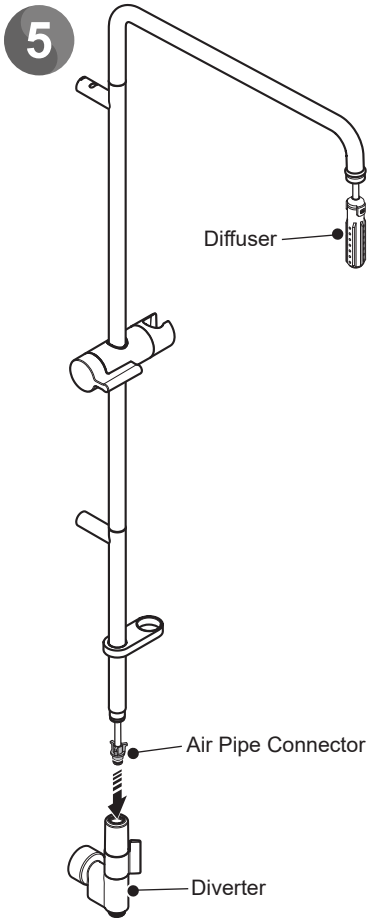

Remove the yellow assembly aid.

Attach the diffuser to the outlet side end of air pipe and air pipe connector to the diverter side.

Slide the hose retaining ring onto the lower bar section.

Push fit the air pipe connector to the female connector inside the top of the diverter.

Install the riser bar assembly into the diverter. Make sure that the lower bar is pushed fully into the diverter to engage the seal.

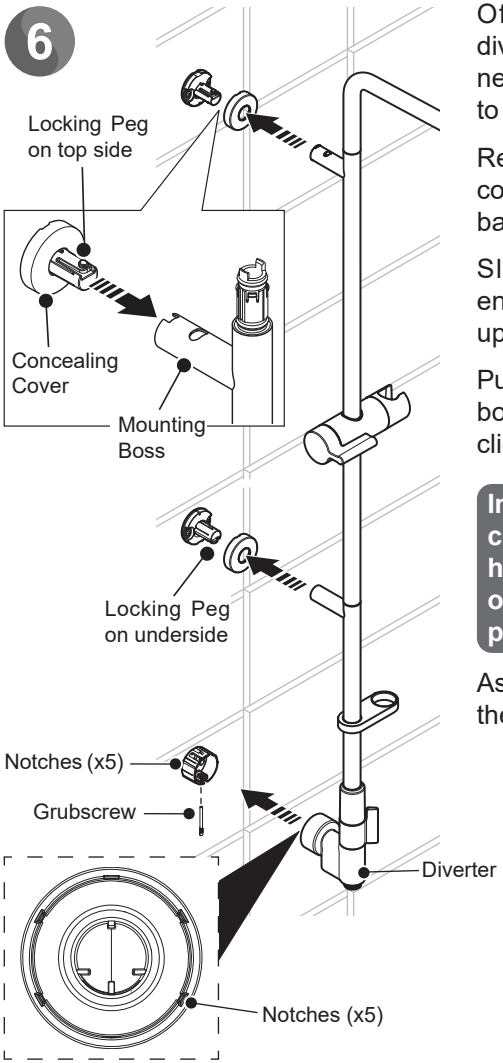

Offer the riser bar assembly and the diverter to the three wall fixing brackets. If necessary, adjust the wall bracket position to the correct places.

Remove the riser bar assembly and fit the concealing covers onto each of the riser bar wall brackets.

Slide the diverter over the wall plate ensuring the notches in the diverter lines up with the notches on the wall plate.

Push the lower bar and middle bar mounting boss onto the wall fixing brackets until it clicks into place.

Important! Ensure that the locking peg clicks in and is fully engaged in the hole in the mounting boss. Pull gently on riser bar to confirm the locking pegs are engaged.

Assemble the grubscrew (shown) to secure the diverter.

7 Connect the Diverter Link Hose

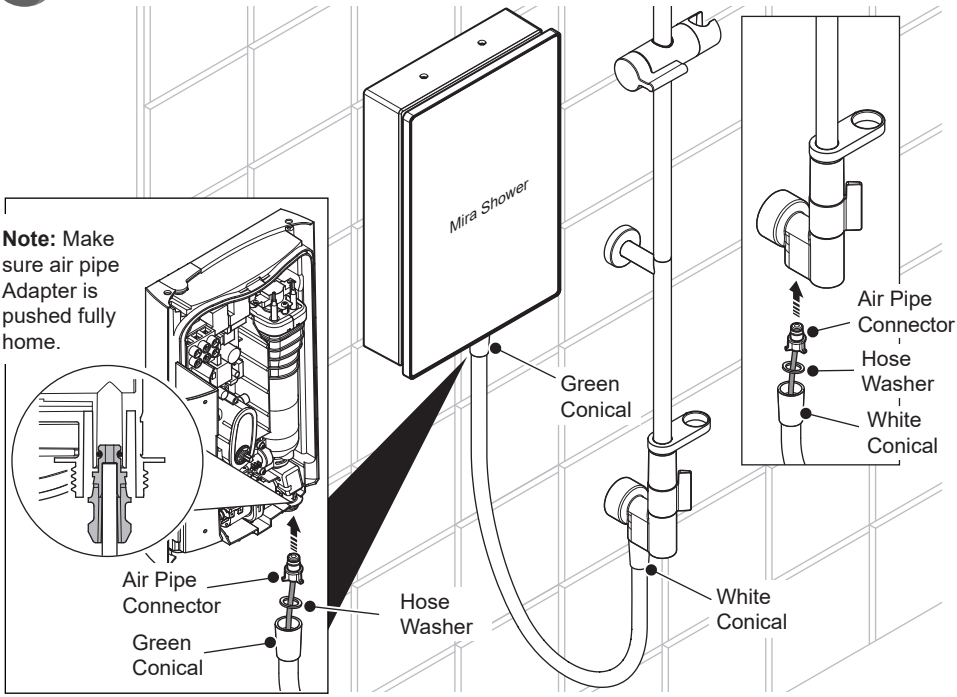

To enable the airboost function that the shower hoses must now be fitted correctly.

Note: The white conical end (unique thread) connects to the diverter inlet and the green conical end (standard thread) connects to the shower outlet.

If the short shower hose is not long enough for your installation, please Contact Mira Customer Service to receive a longer hose.

Push fit the air pipe connector to the diverter inlet (location as shown), then carefully tighten the shower hose onto the diverter inlet.

Push fit the other air pipe connector to the shower outlet, then carefully tighten the shower hose onto the shower outlet.

Note: Make sure the hose washers are fitted and the air pipe is pushed fully home into the connections.

8 Connect the Shower Hose:

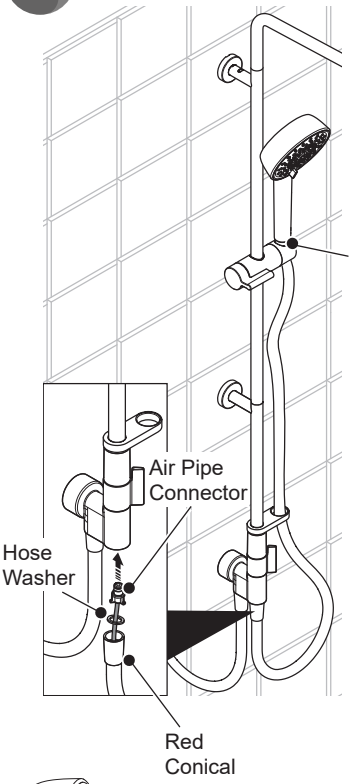

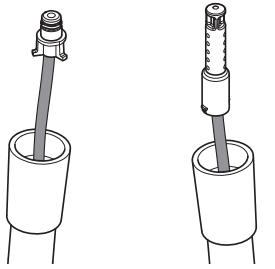

Note: The red conical end with air pipe connector connects to the diverter outlet and the green conical end (or with white label) with air pipe diffuser connects to the showerhead.

Fit the air pipe connector to the diverter outlet (location as shown), then carefully tighten the shower hose onto the diverter outlet.

Feed the hose through the retaining ring.

Fit the diffuser into the showerhead, then carefully tighten the shower hose onto the showerhead.

Note: Make sure the hose washers are fitted and the air pipe is pushed fully home into the connections.

Place the handshower into the clamp bracket assembly.

Only use the supplied handset with this product.

Note: DO NOT hang products from the diverter link hose.

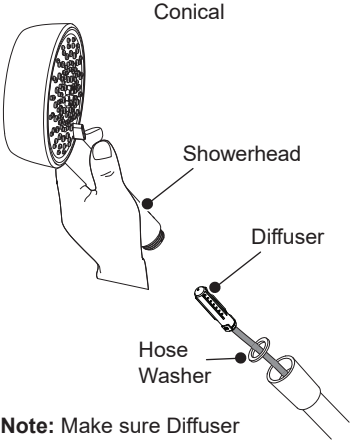

Note: Make sure Diffuser is pushed fully home.

9

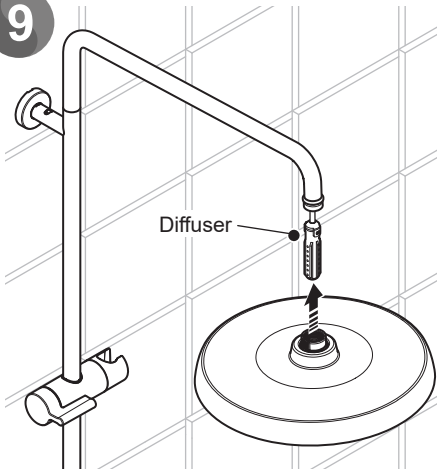

Screw the fixed shower head onto the riser arm.

Note: Ensure the diffuser is in place.

Important! Before using your new fittings please make sure to commission the shower following the manufacturers instructions.

Operation

The diverter lever operates as shown below:

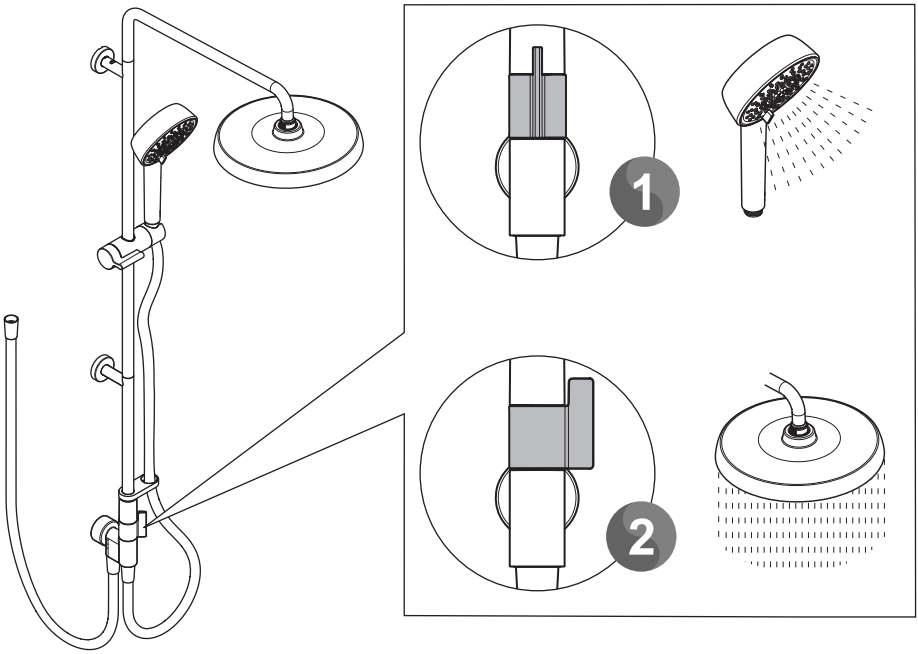

Control Lever Position 1 -
Water comes out of the showerhead.

Control Lever Position 2 -
Water comes out of the overhead.

Note: When diverting from showerhead to overhead a small amount of cold water may initially flow.

Important! DO NOT allow the overhead or handset spray water directly on to an electric shower. The overhead and handset must be positioned so this does not occur.

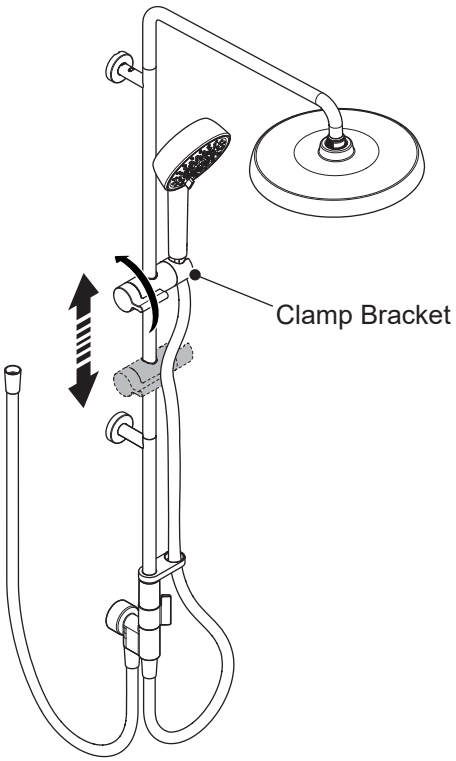

Operate the lever and slide the clamp bracket up and down until it is positioned at the desired height and lock in position.

Cleaning

Always read the IMPORTANT SAFETY INFORMATION for your shower.

Cleaning the Showerhead

Many household and commercial cleaners, including hand and surface cleaning wipes contain abrasives and chemical substances that can damage plastics, plating and printing and should not be used. These finishes should be cleaned with a mild washing up detergent or soap solution, and then wiped dry using a soft cloth.

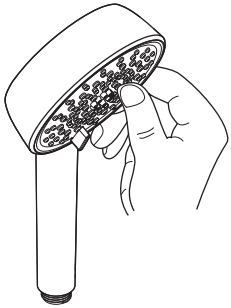

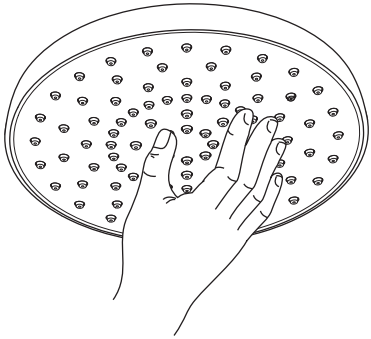

It is IMPORTANT to keep the Showerhead and Hose clean and free from blockage to make sure your shower performs to its optimum. The showerhead MUST be regularly cleaned and the hose MUST be regularly inspected to ensure there is no internal collapse or blockage that could reduce the flow.

Inspecting the Hose

Warning! Failure to keep the showerhead nozzles clear or inspect the hose for blockage or internal/external collapse can restrict the flow rate from the shower. This may cause damage to the shower or result in the temperature delivered to the user rising to unsafe levels with a risk of scalding. You MUST ALWAYS check the temperature before using the shower.

Non-Airboost Version

1. Unscrew the hose from the showerhead and the shower outlet.
2. Inspect the hose.
3. Replace if necessary.

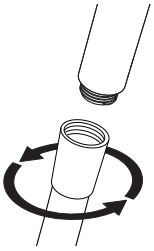

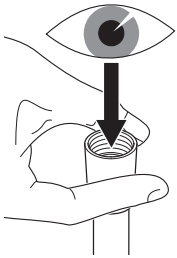

Airboost Version

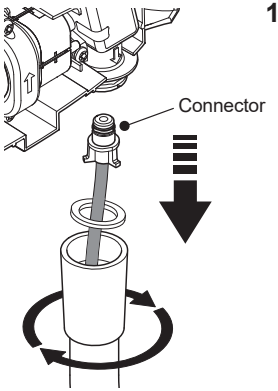

1. Unscrew the shower hose from the shower then pull the air pipe connector from the shower outlet.

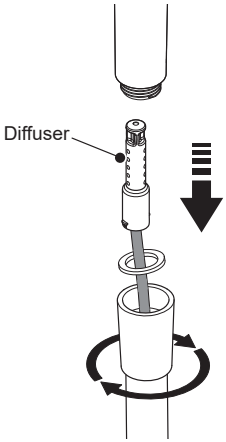

2. Unscrew the shower hose from the showerhead, pull out the pipe diffuser.
3. Ensure the diffuser holes are free from scale, clean if necessary.

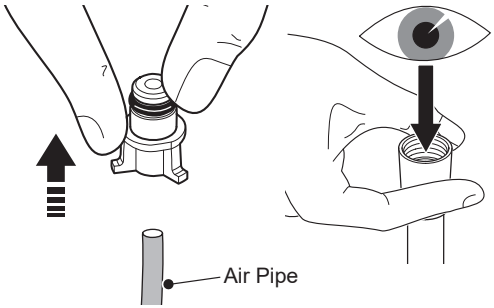

4. Pull the air pipe connector from the air pipe then withdraw the air pipe from the hose.
5. Inspect the hose. Replace if necessary.
6. Reassemble parts in reverse order.

Spray Modes

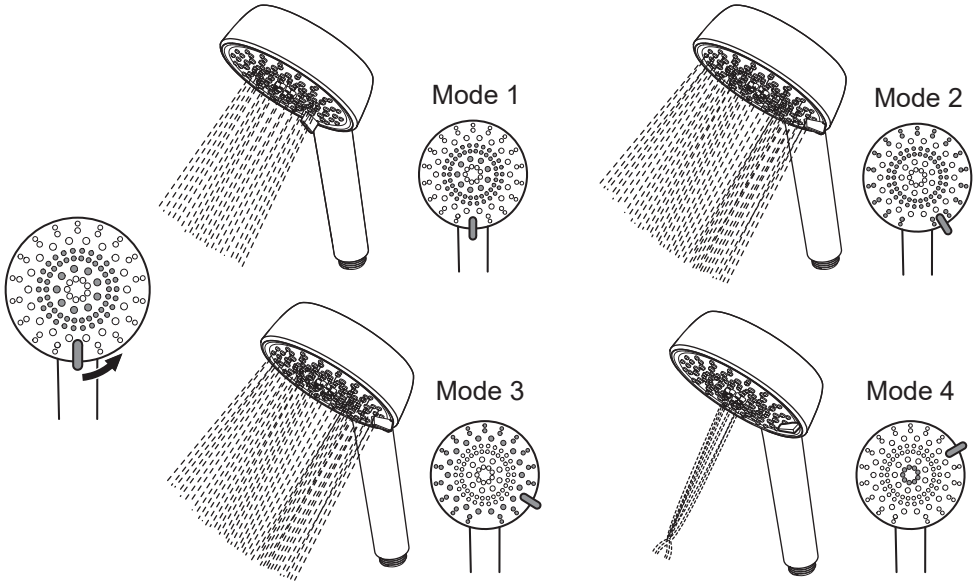

When adjusting the shower spray mode, **DO NOT** force the lever as product damage will occur.

Customer Support

Guarantee

Your product has the benefit of our manufacturer's guarantee which starts from the date of purchase. This guarantee only applies in the United Kingdom and Republic of Ireland.

Activating Your Guarantee

Registering your guarantee is quick and simple. To ensure your product is covered, please register online .

Scan the QR code to activate your guarantee now or call 0800 5978551 within 30 days of purchase (UK only).

What is Covered:

- The guarantee applies solely to the original installation under normal use.
- The product must be installed and maintained in accordance with the instructions given in this guide.
- Servicing must only be undertaken by us or our appointed representative.
- Repair under this guarantee does not extend the original expiry date. The guarantee on any replacement parts or product ends at the original expiry date.
- For shower fittings or consumable items we reserve the right to supply replacement parts only.

The guarantee does not cover:

- Call out charges for non product faults (such as damage or performance issues arising from incorrect installation, improper use, inappropriate cleaning, lack of maintenance, build up of limescale, frost damage, chemical attack, corrosion, system debris or blocked filters) or where no fault has been found with the product.
- Water or electrical supply, waste and isolation issues.
- Routine maintenance or replacement parts to comply with the requirements of Building / Plumbing / Electrical Standards or Schemes.
- Compensation for loss of use of the product or consequential or indirect loss of any kind.
- Damage or defects caused if the product is repaired or modified by persons not authorised by us or our appointed representative.
- Accidental or wilful damage.
- Products purchased ex-showroom display.
- Disinfection or descaling to reduce bacterial growth or contamination.

What to do if something goes wrong

If your product is not working correctly please refer to this manual or the Mira website for fault diagnosis and to check that it is installed and commissioned in accordance with our instructions. If this does not resolve the issue, our Customer Services team are here to help get you back up and running. To help us solve your problem quickly, please have your product name, power rating (if applicable) and date of purchase to hand.

Visit www.mirashowers.co.uk

Visit our website to register your guarantee, book a service visit, diagnose faults and purchase products.

Spares and Accessories

We stock a full range of spare parts and fittings and are all available to purchase either online or over the phone. Our online spare parts selector tool will help you quickly and easily identify the spare part for your product.

Visit www.mirashowers.co.uk/parts-accessories

Replacements and Repairs

In the unlikely event that your product needs a repair, our nationwide repairs and installation team are here to help. You can book a convenient date and time online.

Scan the QR code to book a service visit now or visit www.mirashowers.co.uk/support/repair-services/repair-service

We also offer a comprehensive replacement service for when your product needs a little refresh, visit our website or contact our team for more information on our replacement services.

Help us improve

Your experience is important to us and your review (whether good, bad or otherwise) will be posted on Trustpilot.com immediately to help other people make more informed decisions.

Visit uk.trustpilot.com/review/www.mirashowers.co.uk

Need to get in touch?

UK

T: 0800 001 4040
E: askus@mirashowers.com
www.mirashowers.co.uk

Eire

T: 01 531 9337
E: customerserviceeire@mirashowers.com
www.mirashowers.ie

Mira is a registered trade mark of Kohler Mira Limited.

The company reserves the right to alter product specifications without notice.

Registered Office:
Cromwell Road,
Cheltenham,
Gloucestershire
GL52 5EP

EU Importer address:
Kohler France S.A.S.
30 Boulevard de la Bastille,
75012 Paris,
France

© Kohler Mira Limited, January 2024