KOHLER®

安装说明书

艾贝+
URBANITY+

23753T-9 灵控恒温双花洒淋浴柱-单功能头顶花洒
23860T-9 灵控恒温三出水淋浴柱-单功能头顶花洒

安装之前

所有的资料是按最新出版的产品资料编写而成。科勒公司保留任何时候不经通知即可改变产品特性、包装或产品可供类型的权利。

说明书包括重要的安装、保养及清洁方面的内容，请把这些资料交给用户阅读。

使用环境

1. 最小供水压力：0.1MPa(1bar)。
2. 推荐冷热供水的静态压力：0.3MPa(3bar)。
3. 如果供水压力大于0.5MPa(5bar)，安装减压阀。
4. 热供水温度最低：50ºC；最高：80ºC。
5. 推荐的热供水温度：65ºC。
6. 温度的设定基本范围为：20ºC到49ºC。
7. 安全限位温度：37ºC。
8. 最高混合温度：49ºC。
9. 花洒最高工作温度及环境温度：60ºC。请特别注意花洒同花洒连接的臂管须远离浴霸，否则可能损坏花洒及其密封件，甚至对使用者造成伤害。

使用说明

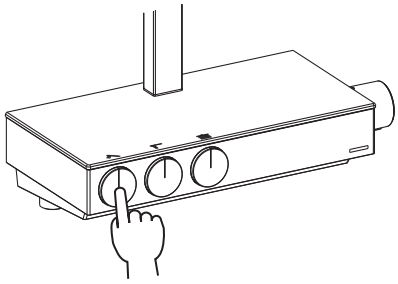

慢慢旋转温控把手即右把手，调整温度，安全限位温度为37ºC；如想得到更高温度，按住按钮继续逆时针旋转。

水流量和出水方式是通过开关按键来控制。按压本体上任意开关按键，相应功能开启；逆时针旋转开关按键，流量变小。

工具和材料(自备)

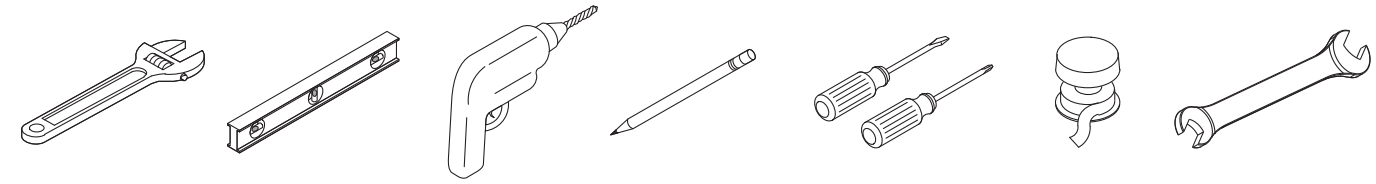

活动扳手　水平尺　电钻　铅笔　螺丝刀　密封带　14mm开口扳手

安装尺寸(23753T)

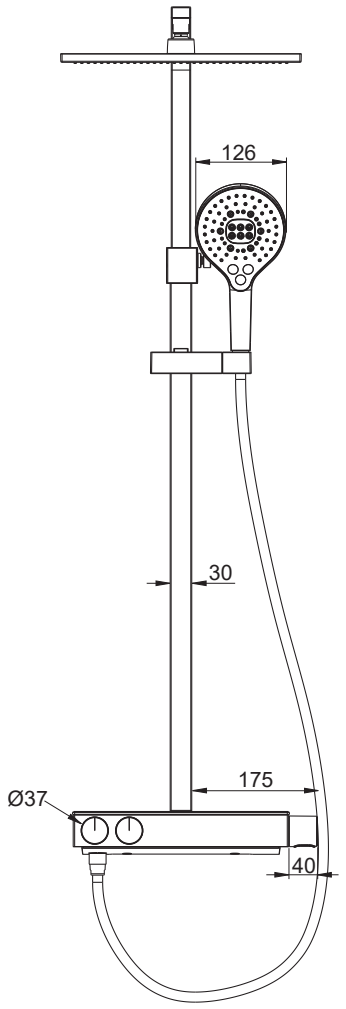
126
30
175
Ø37
40

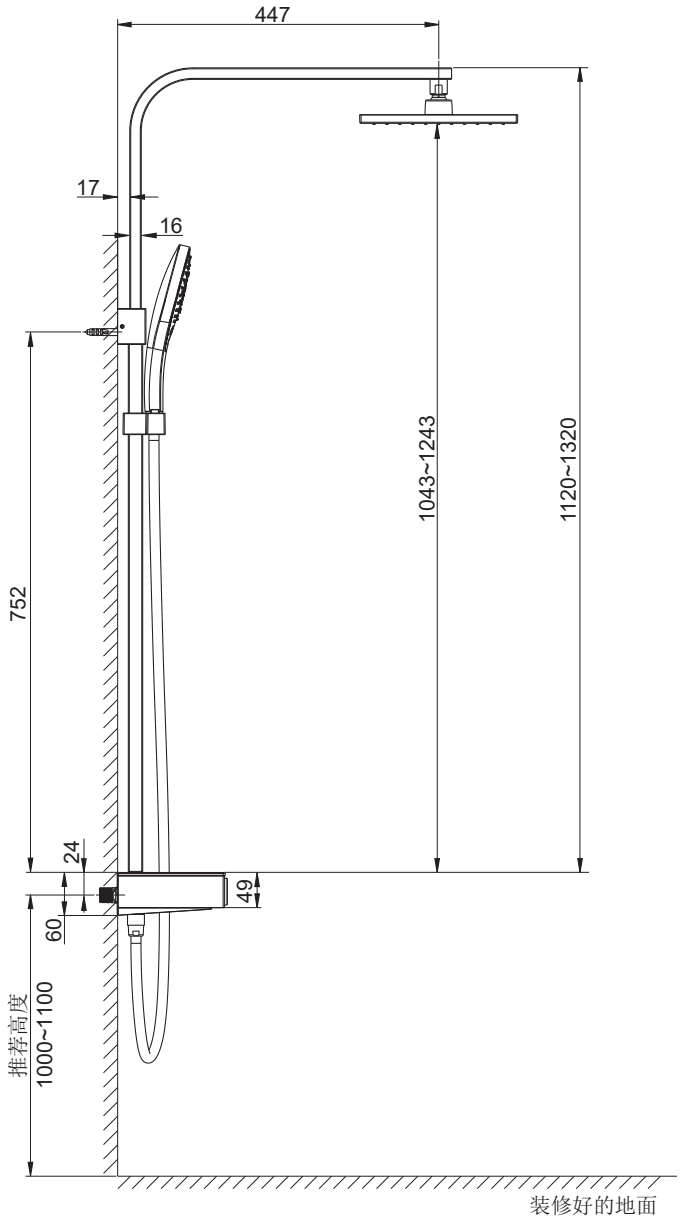
447
17
16
752
1043~1243
1120~1320
24
49
60
推荐高度
1000~1100
装修好的地面

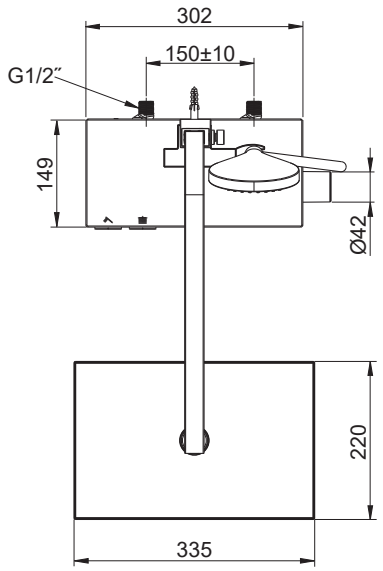
302
150±10
G1/2"
149
Ø42
220
335

安装尺寸(23860T)

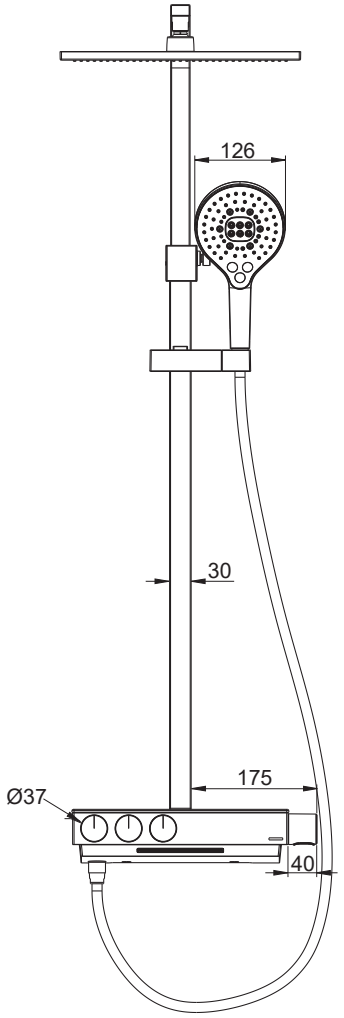
126
30
175
Ø37
40

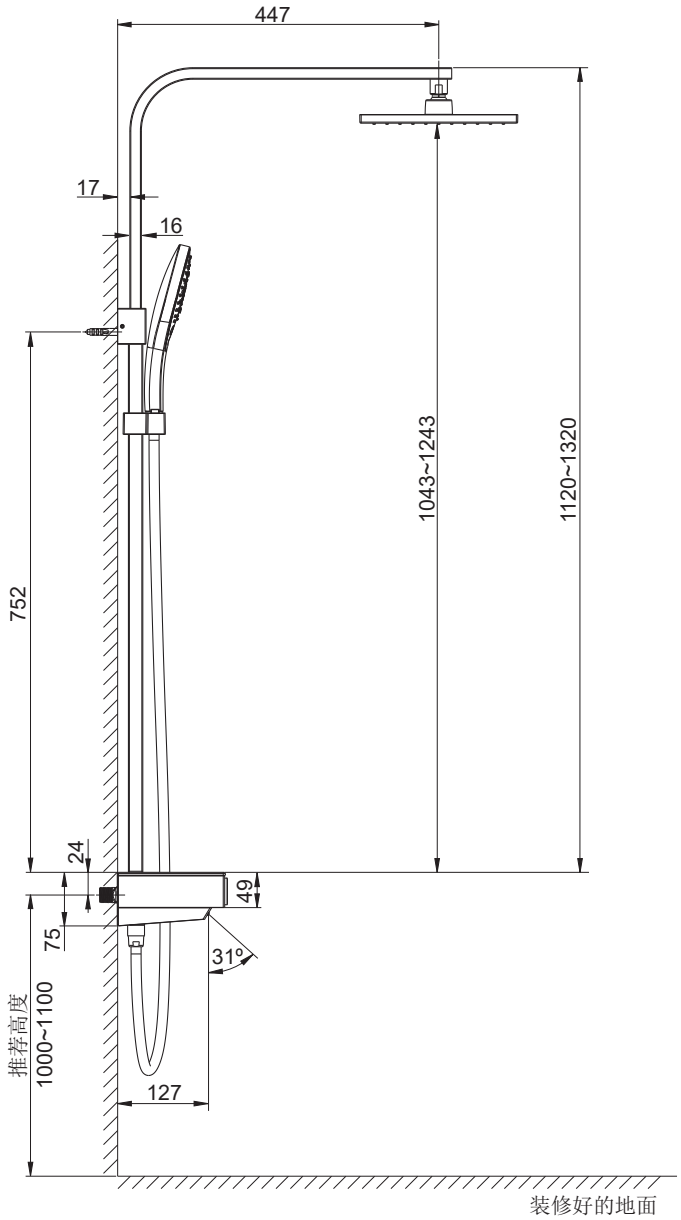
447
17
16
752
1043~1243
1120~1320
24
49
75
31°
推荐高度
1000~1100
127
装修好的地面

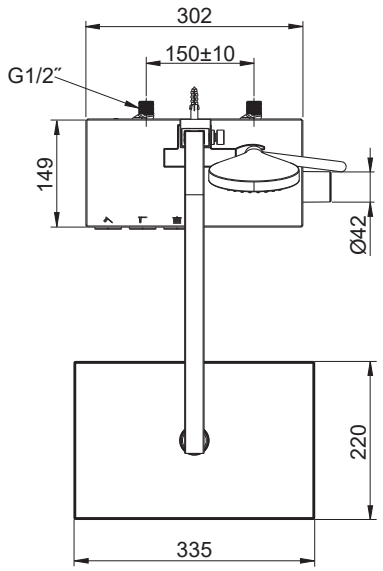
302
150±10
G1/2"
149
Ø42
220
335

安装步骤

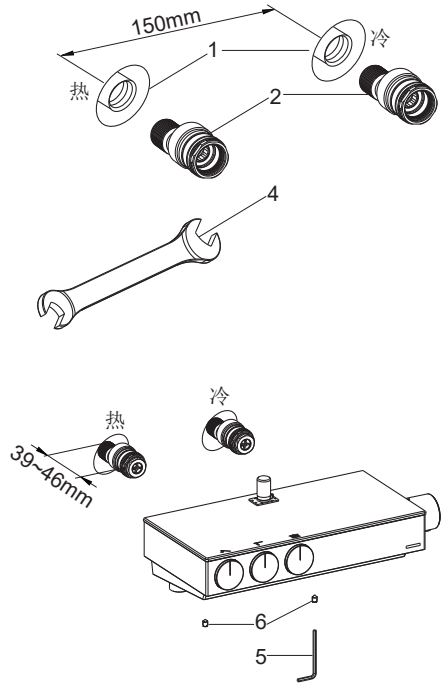

安装本体

为使安装顺利，G1/2″内螺纹管道配件(1)应已安装好，预留150mm的间距，保持水平，并垂直于装修好的平整墙面。彻底冲洗供水管，以清除管路中的杂质。

注意：请在安装进水接头(2)之前做供水管路水压测试。

安装进水接头

1.在接头(2)螺纹上缠绕足以密封的密封胶带或涂适合的密封胶，用14mm开口扳手(4)安装两个进水接头到冷热供水管上。

2.调节两个进水接头(2)，使其中心距离为150mm，保持同一水平并与墙面垂直。它们凸出墙面的尺寸应该在39~46mm之间。

用3mm六角扳手(5)调整两个紧固螺钉(6)，将龙头本体插入两个进水接头，使本体贴紧墙面。

用3mm六角扳手预紧两个紧固螺钉，等安装完淋浴柱再锁紧。

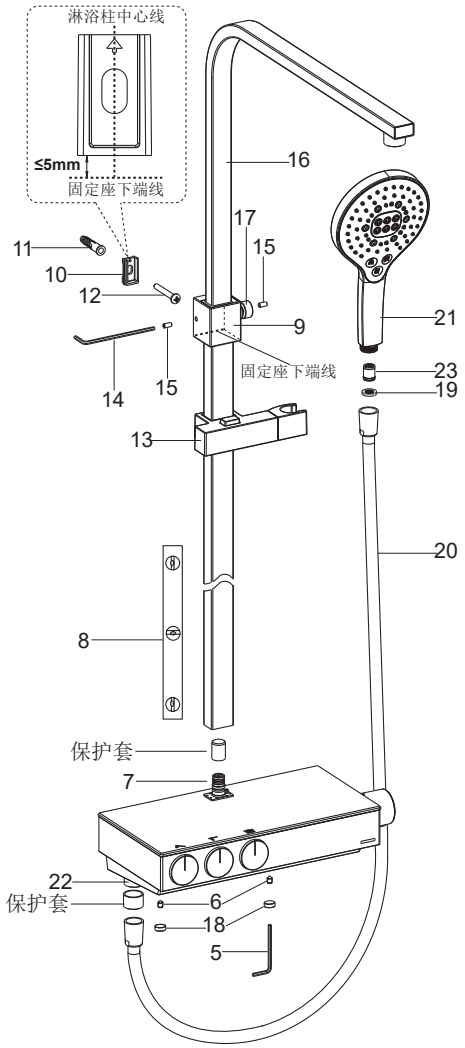

安装花洒淋浴柱和手持花洒

试装淋浴柱组件，以确定支撑座安装位置。

1.去掉本体连接头(7)上的保护套。将淋浴柱插入本体连接头，确保淋浴柱插到底。

2.用水平尺(8)检查淋浴柱的垂直度。用铅笔在墙上标记固定座(9)下端线以及淋浴柱中心线。

3.取下淋浴柱。将支撑座(10)(**注意：**箭头朝上)横平竖直放在墙上已标记位置(支撑座中心对齐淋浴柱中心线)并确保支撑座底部高于固定座下端线不超过5mm。用铅笔在墙上标记支撑座孔位，以确定打孔位置。

安装支撑座

1.在墙上标记处钻Ø10mm且深度最小为45mm的孔。

2.将胀塞(11)放入孔中，然后用十字螺丝刀锁紧螺钉(12)以固定支撑座。

安装淋浴柱

1.将花洒挂架(13)从淋浴柱底部装入。把淋浴柱同时插入支撑座(10)和本体连接头(7)，需要插到底。

2.用2.5mm六角扳手(14)锁紧两个螺钉(15)。

3.根据所需头顶花洒位置调整弯管组件(16)的高度，用8mm六角扳手(自备)拧紧螺母(17)。**警告：**必须拧紧螺母，否则易造成弯管组件脱落危及人身安全。

4.用水平尺(8)保证本体上表面水平。用3mm六角扳手锁紧两个紧固螺钉(6)，然后装上塞扣(18)。

安装手持花洒

1.去掉接头(22)的保护套。将滤网垫片(19)放入花洒软管(20)接头内，用软管连接手持花洒(21)与接头(22)。**注意：**不要过分拧紧。

2.可根据需要将单向阀(23)放入到花洒进水端。

3.将花洒挂在花洒挂架(13)上。

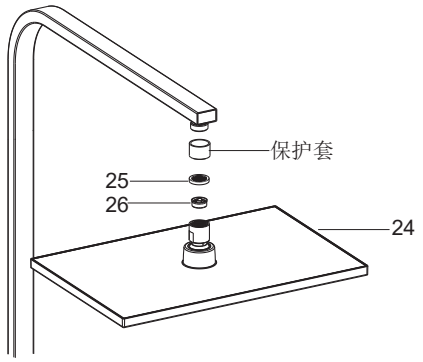

安装头顶花洒

装头顶花洒(24)之前调整至头顶花洒出水状态，打开水源冲掉管路中的杂质。

取出垫片(25)，根据需要将限流器(26)放入头顶花洒接头内，再装回垫片。

去掉弯管组件出水口上的保护套。将头顶花洒旋到弯管组件出水口上，用扳手锁紧。

安装结果检查

检查并确保所有衔接处都已拧紧，确保开关按键未开启。打开水源，使其流入阀芯。检查所有连接处是否漏水，根据需要修理之。

分别按压开关按键，检查各个衔接处连接是否良好，观察出水效果是否正常。关闭龙头。

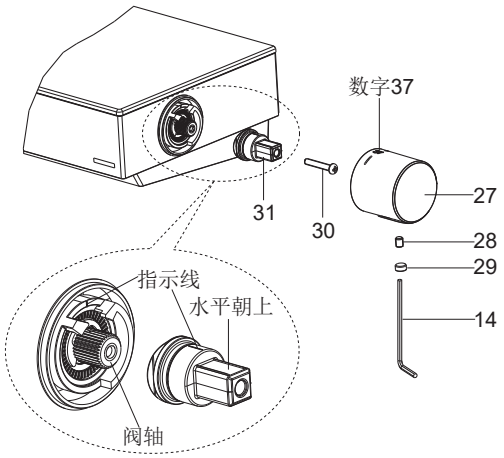

温度测试与调整

温度测试前，应确保供水系统充分且有较高的温度。温控把手(27)上的数字37垂直朝上时，打开龙头让水流出。进行温度测量，出厂时温度设定在36~38ºC范围之内。如超出这个范围，要进行调整。调整步骤如下：

取出塞扣(29)，用2.5mm六角扳手(14)取下螺钉(28)，卸下温控把手。用螺丝刀取出螺钉(30)，拆下齿套(31)。

在正常水流状态下，由冷水位置开始慢慢转动温控阀轴（保持同一方向）直至获得37ºC水流。如果温度超过37ºC，回到冷水位置重新调整。温度稳定后，不要转动温控阀轴，将齿套上的指示线对准塑料套上的指示线装入，用螺丝刀锁紧螺钉(30)。安装温控把手，使温控把手上的数字37垂直朝上（装配后不按按钮时不能逆时针转动）。用2.5mm六角扳手锁紧螺钉(28)，塞入塞扣(29)。

维护与保养

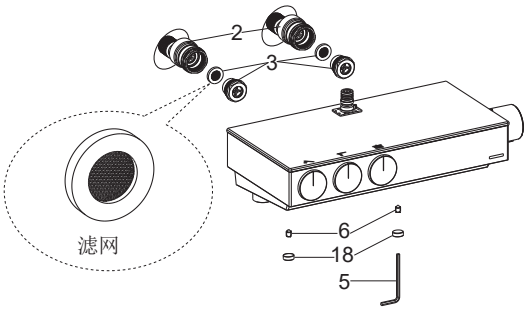

清洗滤网

滤网可起到保护龙头的作用，但长时间使用后，水垢或杂质可能会堵塞滤网，降低水流量。如果有类似情况发生，关闭水源，卸下淋浴柱。

将塞扣(18)取出，用3mm六角扳手(5)旋出两个紧固螺钉(6)，卸下龙头。将接头(3)(含滤网)从进水接头(2)上旋出。用热醋清洗滤网。然后依次装回。

清洗温控阀

如供水水质较硬或长时间使用，水垢或杂质会阻塞温控阀上的滤网，流量会降低。需要清理请按照下列步骤进行：关闭供水系统，使流量阀处于打开位置后进行温控阀拆卸作业。温控阀是较敏感的配件，所以要十分小心。

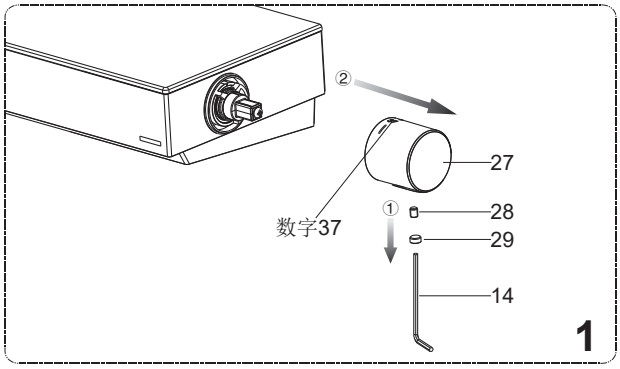

1. 拆卸前确保温控把手上的数字37垂直朝上(即不按按钮时不能逆时针转动)。拆卸温控把手(27)。

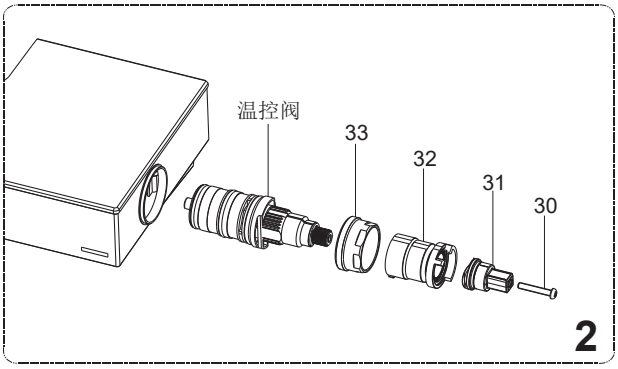

2. 取下螺钉(30)和齿套(31)，接着将螺母(33)和塑料套(32)卸下。小心地卸下温控阀。用热醋进行清洗。

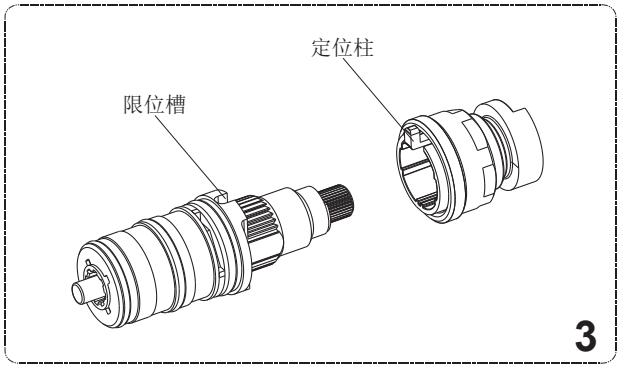

3. 清洗后，将塑料套和螺母(限位组件)装到温控阀上，使塑料套的定位柱嵌入温控阀的限位槽内。

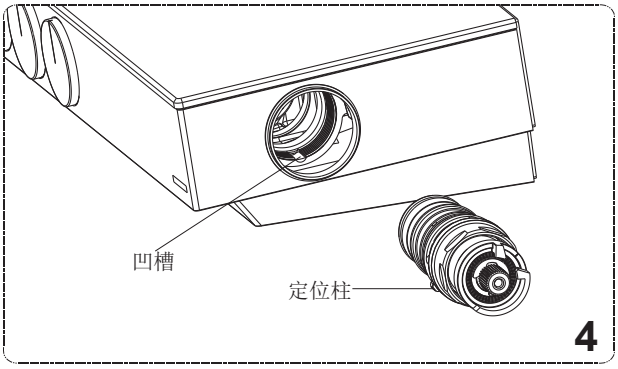

4. 将塑料套的定位柱与龙头本体内孔凹槽对齐，装入温控阀并锁紧螺母。

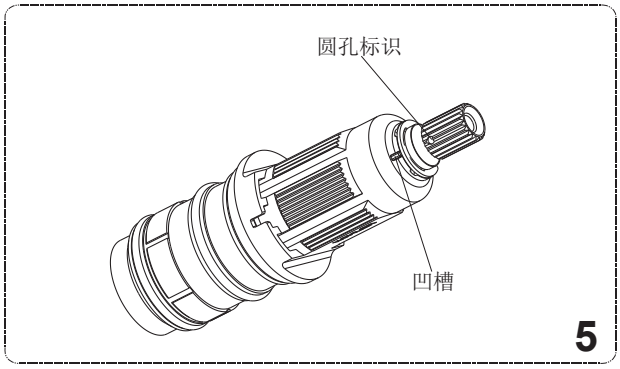

5. **注意：**确保拆卸安装过程中不要转动温控阀轴。如不小心转动了阀轴，要调整阀轴使外齿上的圆孔标识与相邻的塑料套上的凹槽对齐，或者按前述方法进行调整。

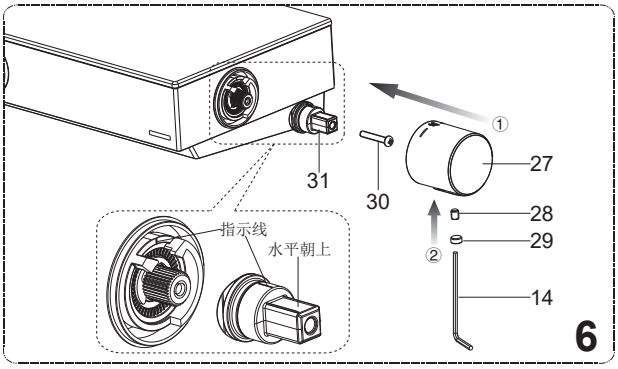

6. 不要转动温控阀轴，将齿套上的指示线对准塑料套上的指示线装入，用螺丝刀锁紧螺钉(30)。安装温控把手(27)，使温控把手上的数字37垂直朝上(装配后不按按钮时不能逆时针转动)。用2.5mm六角扳手(14)锁紧螺钉(28)，塞入塞扣(29)。

清洗说明

适用于所有加工处理过的表面：以中性肥皂水清洗镀层表面，再以干净软布彻底擦干整个表面，许多清洁剂比如氨水、去污粉及洁厕灵等，会对电镀表面造成伤害，切忌使用。

有磨损性的清洁用具或清洁剂也不可使用于科勒牌的水龙头及其配件上。

23753T-9 灵控恒温双花洒淋浴柱-单功能头顶花洒

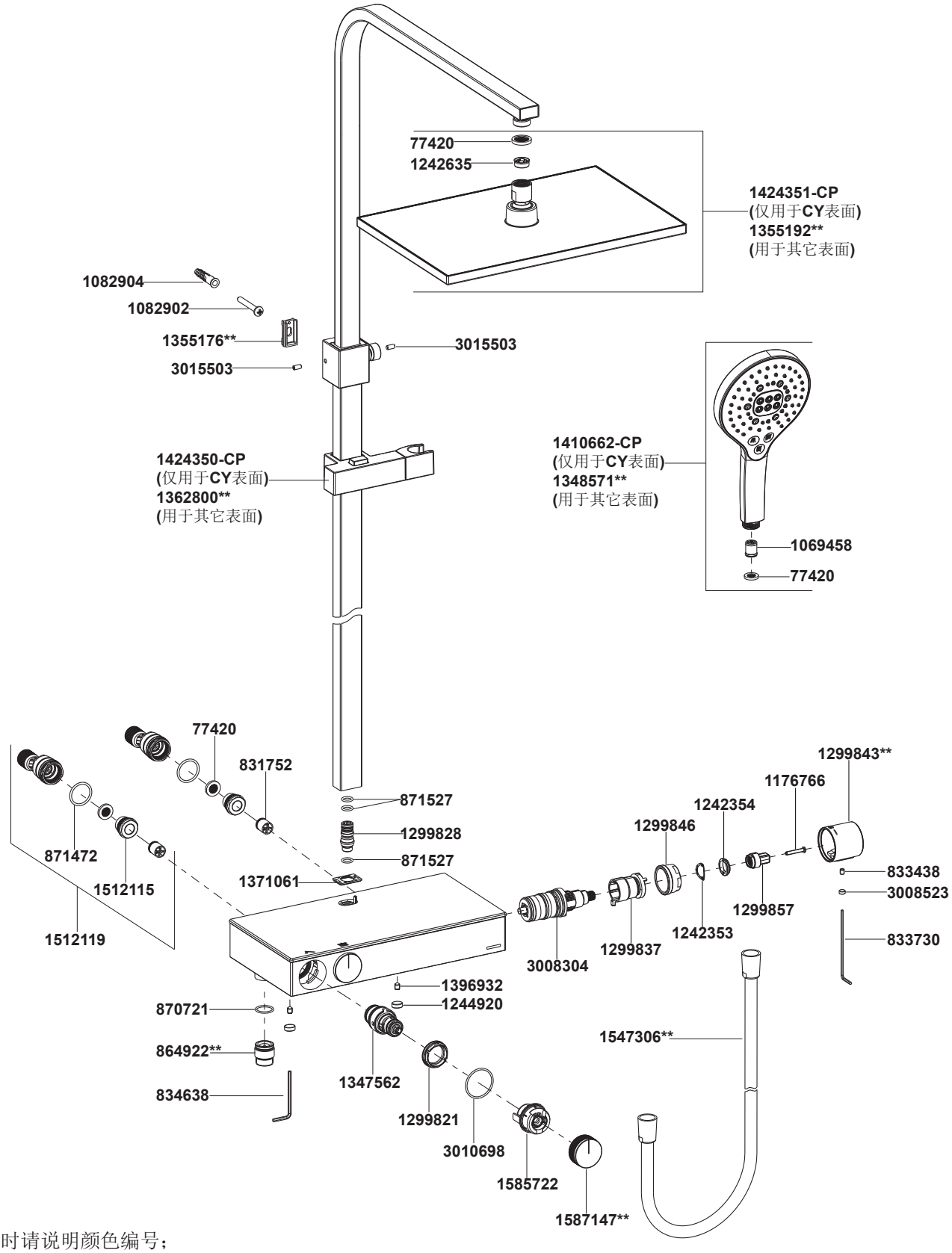

**订购时请说明颜色编号；

注意：除中国外，其他亚太区订购服务零件时请在前面加SP(即SPxxxxxxx**)。

23860T-9 灵控恒温三出水淋浴柱-单功能头顶花洒

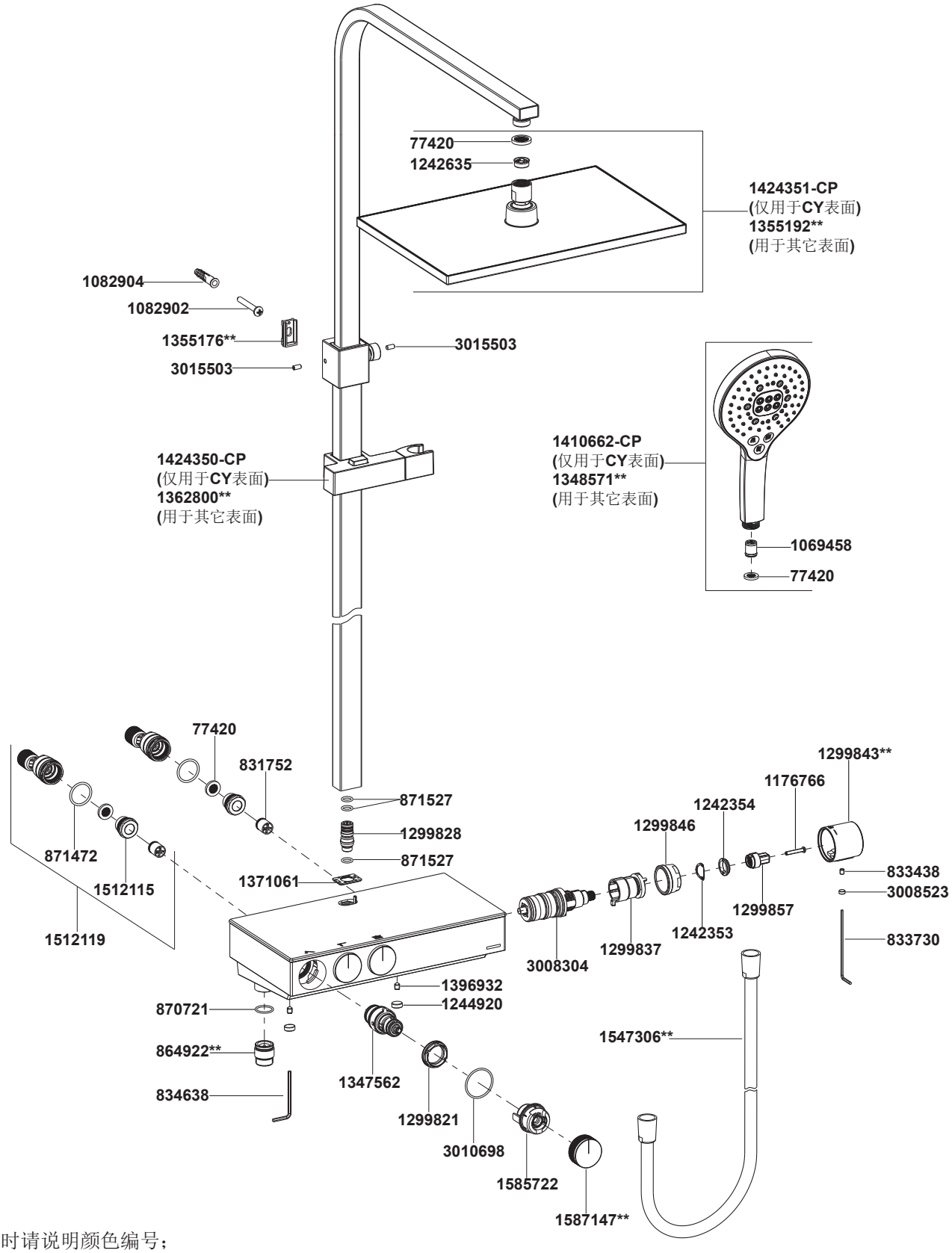

**订购时请说明颜色编号；

注意：除中国外，其他亚太区订购服务零件时请在前面加SP(即SPxxxxxxx**)。

KOHLER®

INSTALLATION INSTRUCTIONS

URBANITY+

23753T-9 Thermostatic Dual Shower Column With Single Function Showerhead
23860T-9 Thermostatic 3 Way Shower Column With Single Function Showerhead

BEFORE YOU BEGIN

All information is based on the latest product information available at the time of publication. Kohler Co. reserves the right to make changes in product characteristics, packaging, or availability at any time without notice.

Please leave these instructions for the consumer. They contain important information.

OPERATION CONDITION

1. Minimum supply pressures: 0.1MPa(1bar).
2. Recommended supply static pressures: 0.3MPa(3bar) on hot and cold water.
3. Supply pressure greater than 0.5MPa(5bar): install a pressure reducer.
4. Hot water temperatures, minimum: 50ºC, maximum: 80ºC.
5. Recommended hot water temperature: 65ºC(energy-saving).
6. Setting range, approximately: 20ºC to 49ºC.
7. Safety stop at: 37ºC.
8. Maximum mixed water temperature: 49ºC.
9. The highest environment temperature for handshower & showerhead is 60ºC. Please keep handshower, showerhead and shower arm away from heater, or it may become damaged and cause injury to the user.

OPERATION INSTRUCTIONS

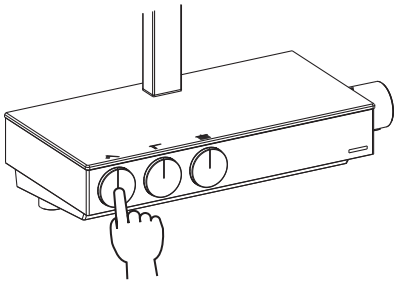

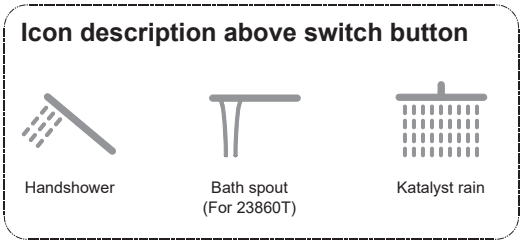

The temperature is set by slowly turning the temperature handle(right-hand handle). For safety reasons, there is a stop that limits temperature to 37ºC. To get a higher temperature, push the button(on right-handle) and continue turning the temperature handle counter-clockwise.

Water flow and dispense is set by switch buttons. Press any switch button on the faucet body, the water will run from corresponding outlet. Rotate the switch buttons counter-clockwise to reduce flow.

STANDARD APPLICABLE

Special model meets or exceeds the following at date of manufacture: TIS

TOOLS AND MATERIALS (USER SUPPLIED)

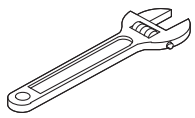
Adjustable Wrench

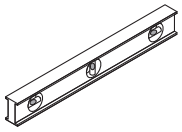
Level

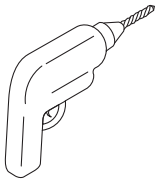
Drill

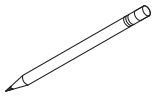
Pencil

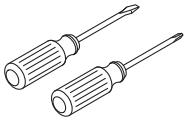
Screwdrivers

Sealant Tape

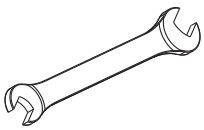
14mm Wrench

ROUGH-IN DIMENSIONS (23753T)

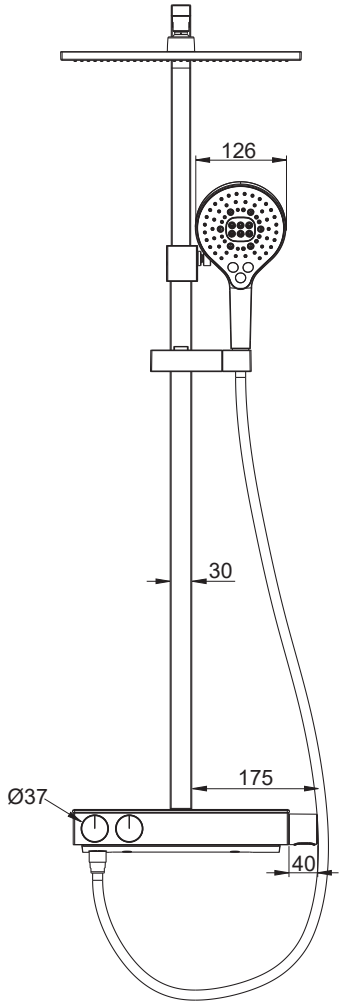

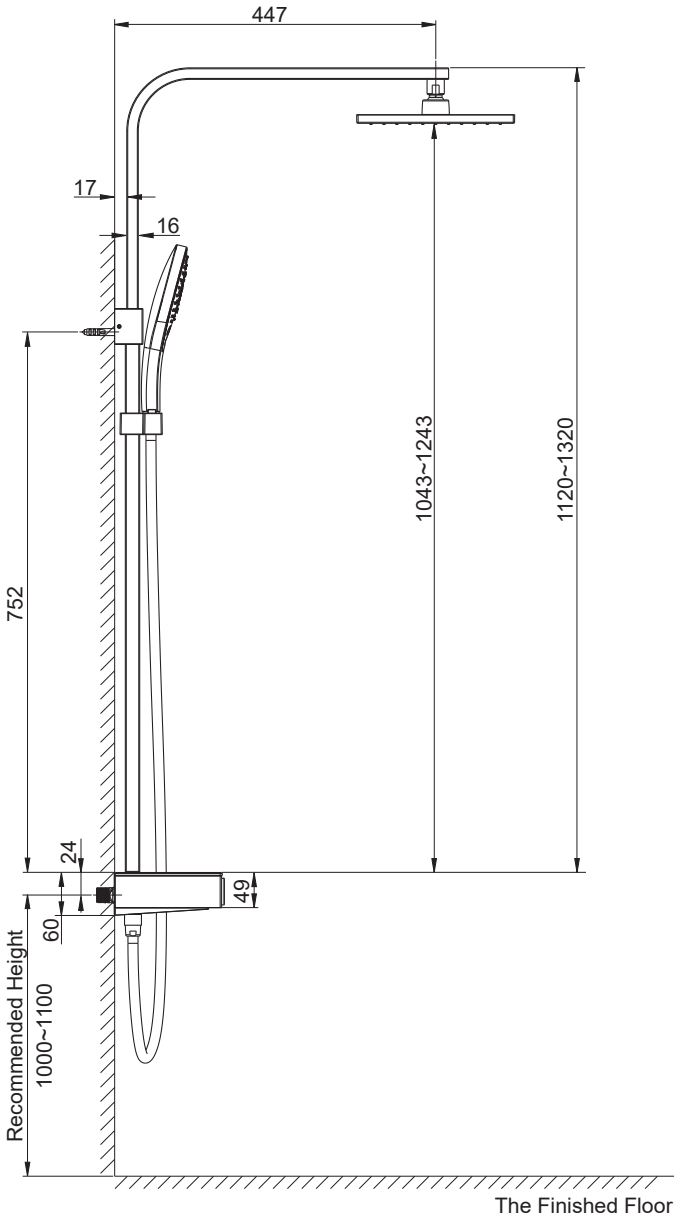

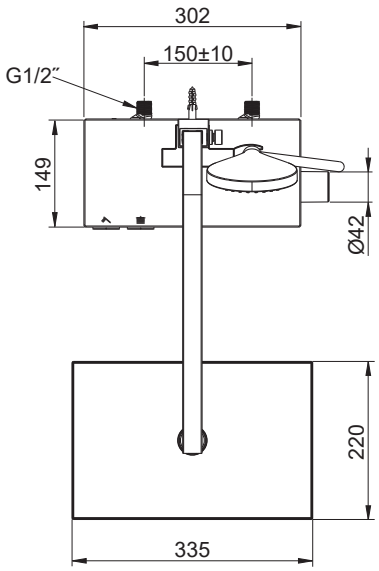

ROUGH-IN DIMENSIONS (23860T)

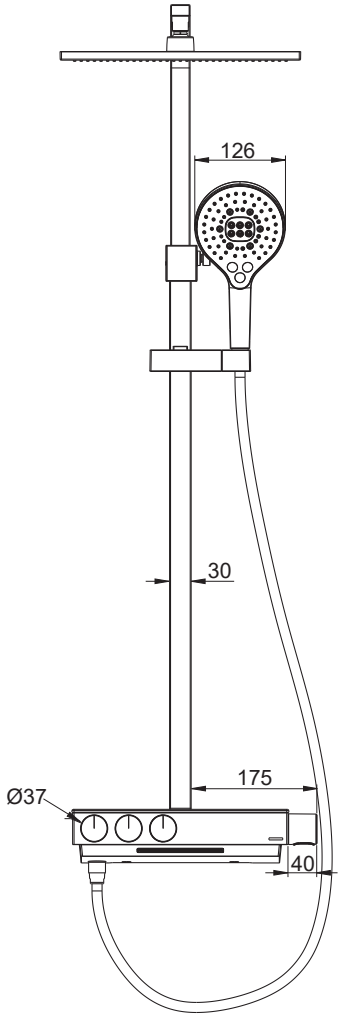

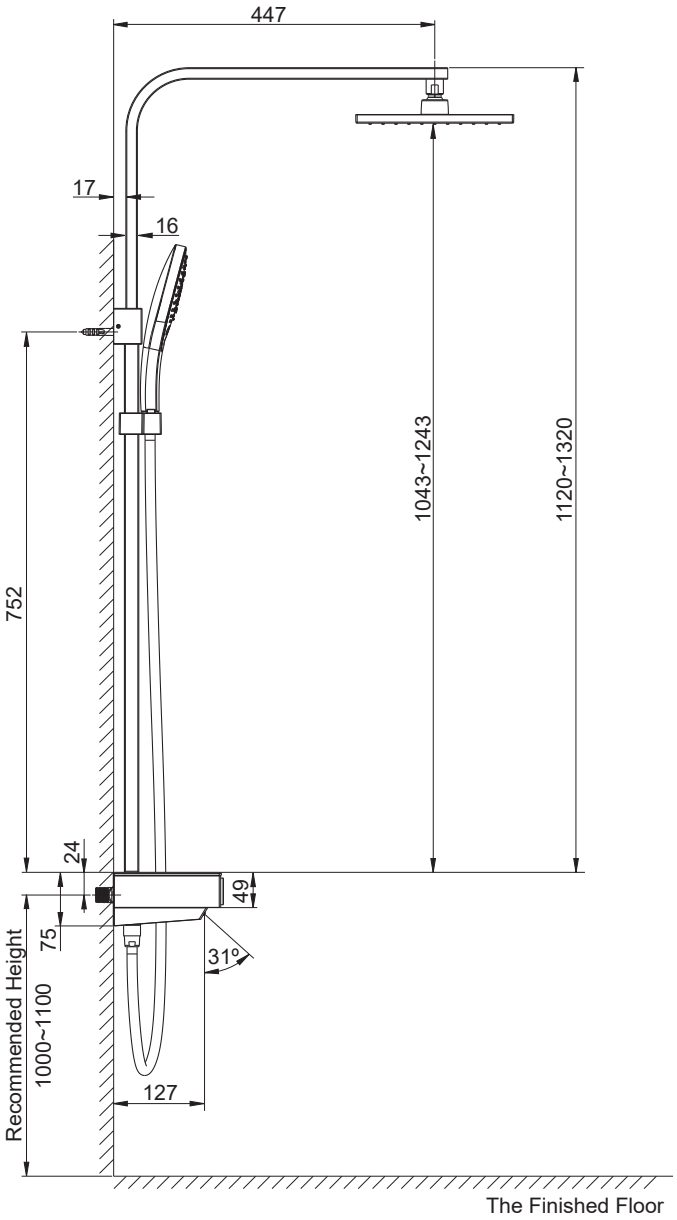

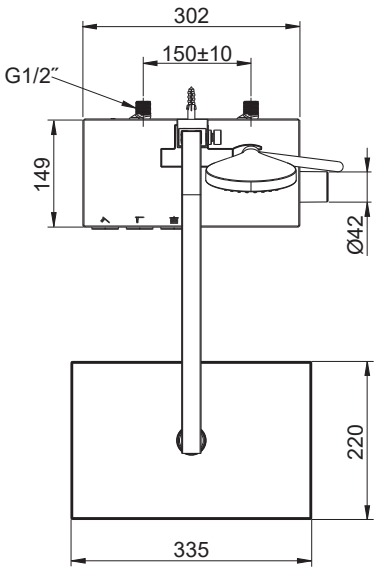

INSTALLATION

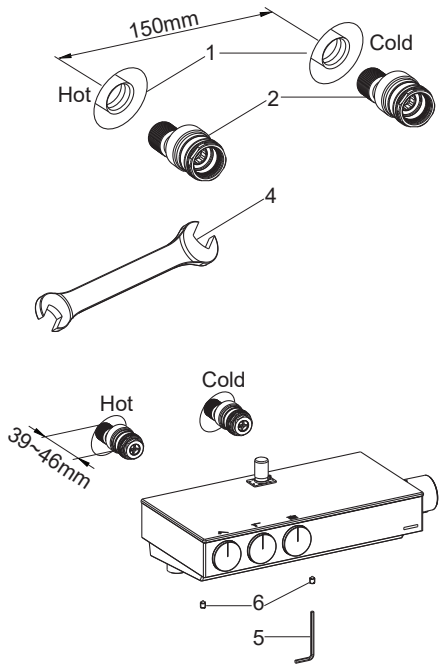

Install the Body

To perform installation, installer must provide G1/2″ female supply fittings(1), spaced 150mm apart, horizontally and vertically to the finished flat wall. Flush the water supply pipes thoroughly to remove any debris.

NOTE: Apply water pressure test on water supply pipes before installing the connectors(2).

Install the connectors
1. Apply enough tape or suitable sealant on threads of connectors(2). Install two connectors into the hot and cold supply pipes with 14mm wrench(4).
2. Adjust the center-to-center distance between the connectors(2) to 150mm horizontally and vertically to the finished flat wall. They should extend 39~46mm beyond the finished wall.

Adjust two screws(6) with 3mm hex wrench(5). Install the faucet body to the connectors until it is against the finished wall.

Pre-tighten two screws with 3mm hex wrench. Tighten them after completing the installation of shower column.

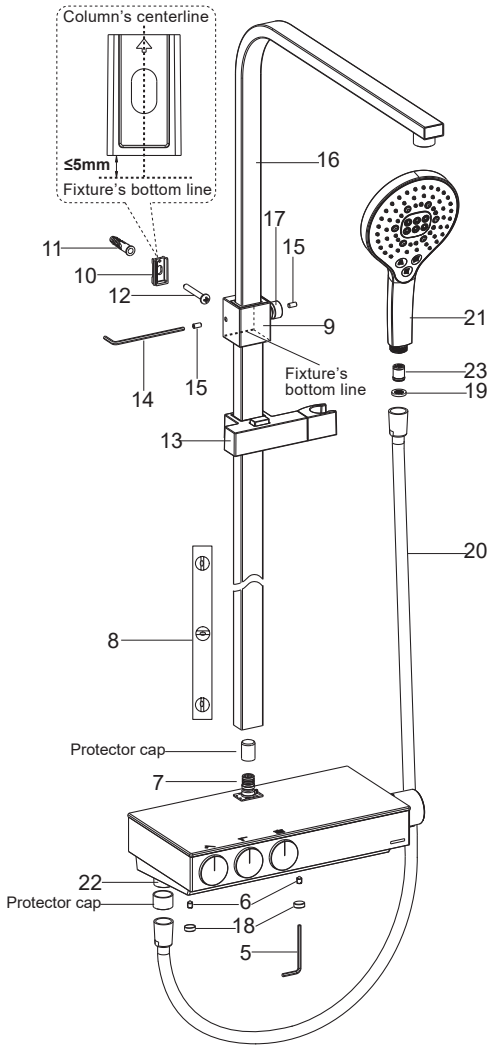

Install the Shower Column and Handshower

Rehearse the shower column kit installation for the base mounting location determination.
1. Remove the protector cap from the connecting pipe(7). Insert the shower column onto the connecting pipe firmly to the end.
2. Check whether the shower column is vertical with the level(8). Mark the locations of the fixture's(9) bottom line and shower column's centerline on the wall with a pencil.
3. Uninstall the shower column. Place the mounting base(10)(**NOTE**: Arrow facing up) horizontally and vertically on the wall at the marked position (The mounting base's center should align with shower column's centerline), ensure the bottom of the mounting base is not more than 5mm above the fixture's bottom line as well. Mark the hole of the mounting base with a pencil.

Install the mounting base.
1. Drill Ø10mm hole(The depth is not less than 45mm) on the mark.
2. Insert the anchor(11) into the hole. Tighten the screw(12) with a screwdriver in order to secure the mounting base.

Install the shower column.
1. Slide the shower bracket(13) into the shower column. Install the shower column to the mounting base(10) and connecting pipe(7) firmly to the end.
2. Tighten the screws(15) with 2.5mm hex wrench(14).
3. Determine the required height of the showehead by adjusting the tube kit(16). Tighten the nut(17) with 8mm hex wrench(user supplied). **WARNING:** Ensure the nut is tightened firmly to avoid tube kit falling and personal injury.
4. Ensure the upper surface of the faucet body is horizontal with the level(8). Tighten two screws(6) with 3mm hex wrench. Press the plugs(18) into faucet.

Install the handshower.
1. Remove the protector cap from the connector(22). Put the washer(19) into the hose(20). Connect the connector(22) and handshower(21) with hose. **NOTE**: Do not over tighten.
2. Install the check valve(23) into the handshower if needed.
3. Hang the handshower on the shower bracket(13).

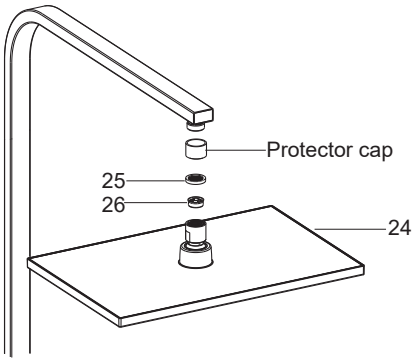

Install the Showerhead

Before installation of showerhead(24), turn the diverter handle for showerhead, run hot and cold water to remove any debris.

Take out the washer(25). Install the restrictor(26) into the showerhead if needed. Reinstall the washer.

Remove the protector cap from the tube kit outlet. Tighten the showerhead onto the tube kit outlet with strap wrench.

INSTALLATION CHECKOUT

Ensure that all connections are tight, the switch buttons are not turned on. Turn on the water supply. Run water through the valve. Check for leakage. Repair as needed.

Press the buttons separately. Check whether all connections and water flow are well. Shut off the faucet.

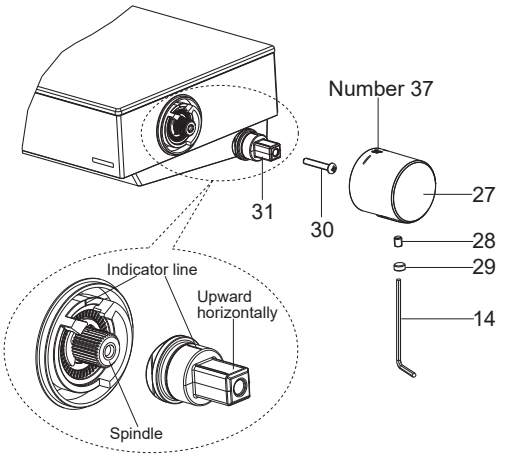

Verification and Setting

Make sure that the water feeds of the faucet have reach the highest temperature by running the water sufficiently. When the number 37 on the temperature handle(27) is upward vertically, the water temperature should be within a range of 36ºC and 38ºC, as measured by a thermometer. If not, the installer can adjust the setting. Proceed with the setting as follows:

Remove the plug(29). Take out the screw(28) with 2.5mm hex wrench(14) to uninstall the temperature handle(27). Remove the screw(30) with a screwdriver. Remove the adapter spline(31).

Under the normal condition of water flow, slowly turn the temperature selector(Always in the same direction) from the cold water position until water temperature reaches 37ºC. If the temperature goes over 37ºC, go back to the “cold” setting and reset it. When the temperature is stable, do not turn the cartridge spindle. Install the adapter spline. Ensure the indicator line on the adapter spline align with the indicator line on the stopper. Tighten the screw(30) with a screwdriver. Install the temperature handle. Ensure the number 37 on the temperature handle is upward vertically(After assembly, it could not be turned counter-clockwise if not pushing the button). Tighten the screw(28) with 2.5mm hex wrench. Insert the plug(29).

CARE AND MAINTENANCE

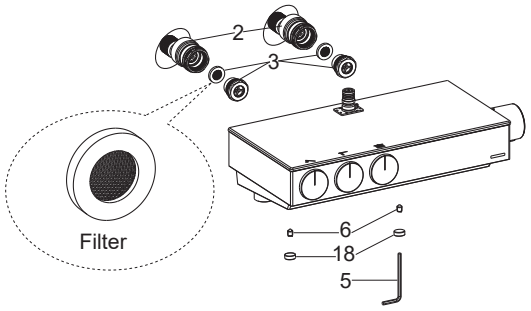

Clear the Filter

The filters can protect the faucet, but it may get obstructed and reduce water flow after a long time of use. If this happens, turn off the water supply, uninstall the shower column.

Take out the plugs(18). Unscrew two screws(6) with 3mm hex wrench(5) to uninstall the faucet. Unscrew the connectors(3, with screens) from the connectors(2). Clean the filters by soaking them in warm vinegar. Reinstall them in turn.

Clear the Thermostatic Cartridge

Very hard water can obstruct the filters on the thermostatic cartridge and reduce the water flow. Please clean the cartridge as follows: Shut off the water supply of the faucet and turn on the water flow valve, then proceed to remove the cartridge. The cartridge is sensitive part, please be careful.

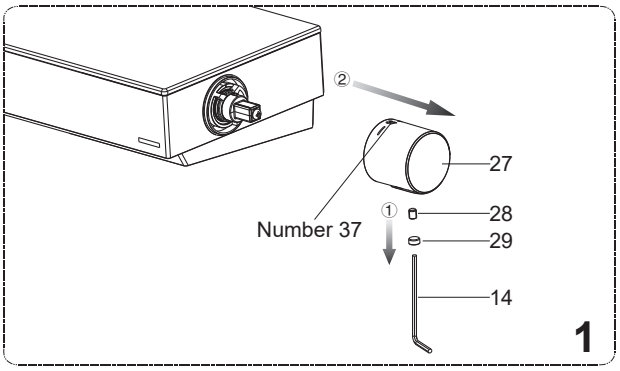

1. Before your action, make sure the number 37 on the temperature handle is upward vertically(It could not be turned counter-clockwise if not pushing the button). Remove the temperature handle(27).

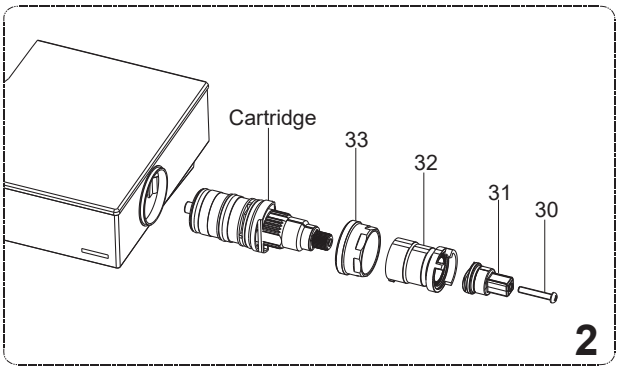

2. Remove the screw(30) and adapter spline(31), and then unscrew the nut(33) and stopper(32). Remove the cartridge cautiously. Clean the thermostatic cartridge by soaking it in warm vinegar.

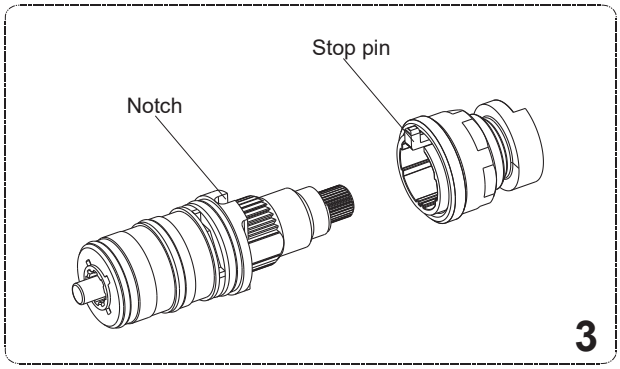

3. After cleaning, install the “stop assembly” back on the cartridge, adjust the stop pin into the notch.

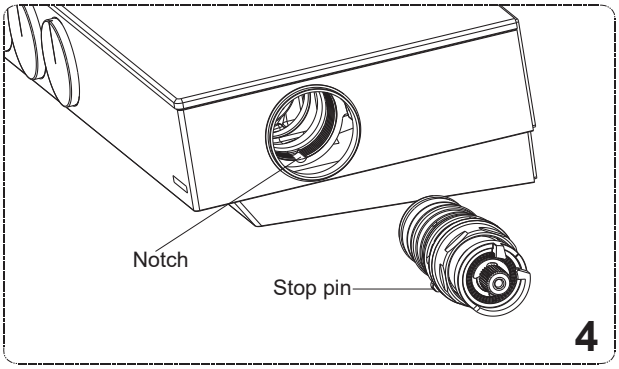

4. Install the assembly cartridge and stop in the body, adjust the stop pin into the notch.

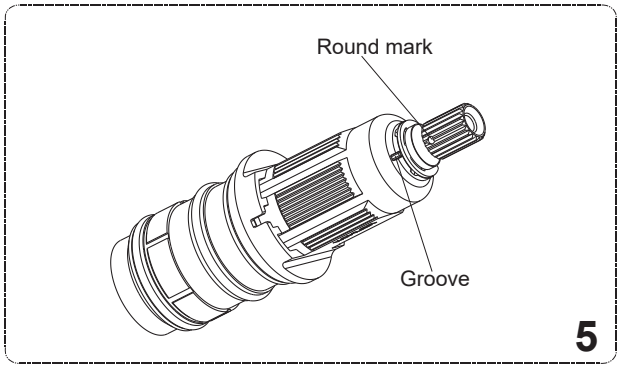

5. **NOTE:** Do not turn the cartridge when reinstalling it. If you turned it accidentally, you should adjust it and be sure that the round mark is correctly in line with the groove, or readjust as per the steps of verification and setting.

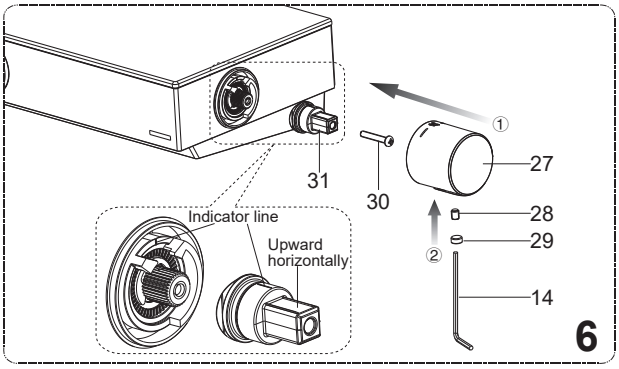

6. Install the adapter spline(without turning the spindle). Ensure the indicator line on the adapter spline align with the indicator line on the stopper. Tighten the screw(30) with a screwdriver. Install the temperature handle(27). Ensure the number 37 on temperature handle is upward vertically(After assembly, it could not be turned counter -clockwise if not pushing the button). Tighten the screw (28) with 2.5mm hex wrench(14). Insert the plug(29).

CLEANING INSTRUCTIONS

All Finishes: Clean the finish with mild soap and warm water. Wipe entire surface completely dry with clean soft cloth. Many cleaners may contain chemicals, such as ammonia, chlorine, toilet cleaner etc. which could adversely affect the finish and are not recommended for cleaning.

Do not use abrasive cleaners or solvents on Kohler faucets and fittings.

23753T-9 Thermostatic Dual Shower Column With Single Function Showerhead

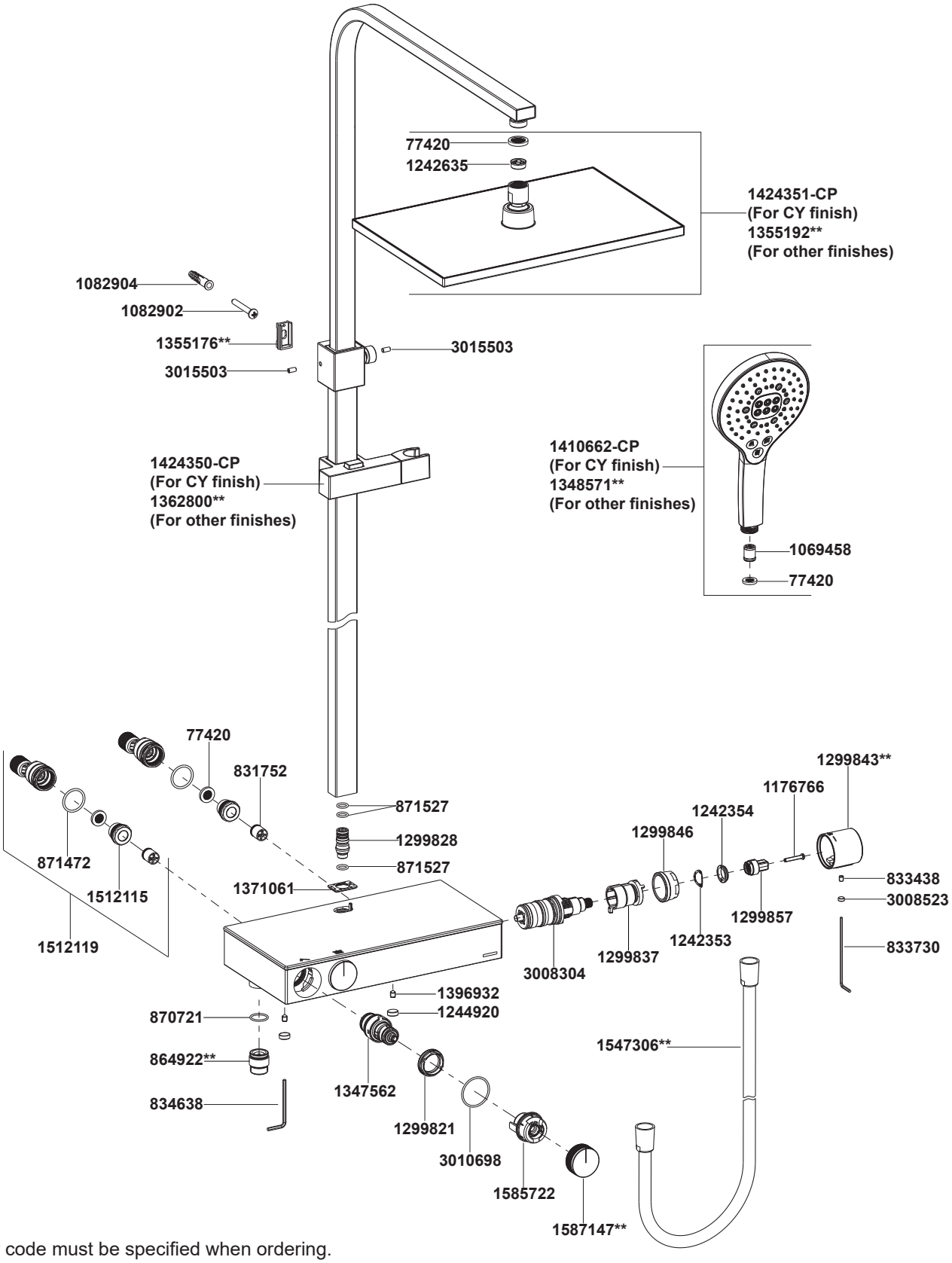

**Color code must be specified when ordering.

NOTE: For all Asia pacific regions (excluding China) add SP (SPxxxxxxx**) in front of the part number when ordering.

23860T-9 Thermostatic 3 Way Shower Column With Single Function Showerhead

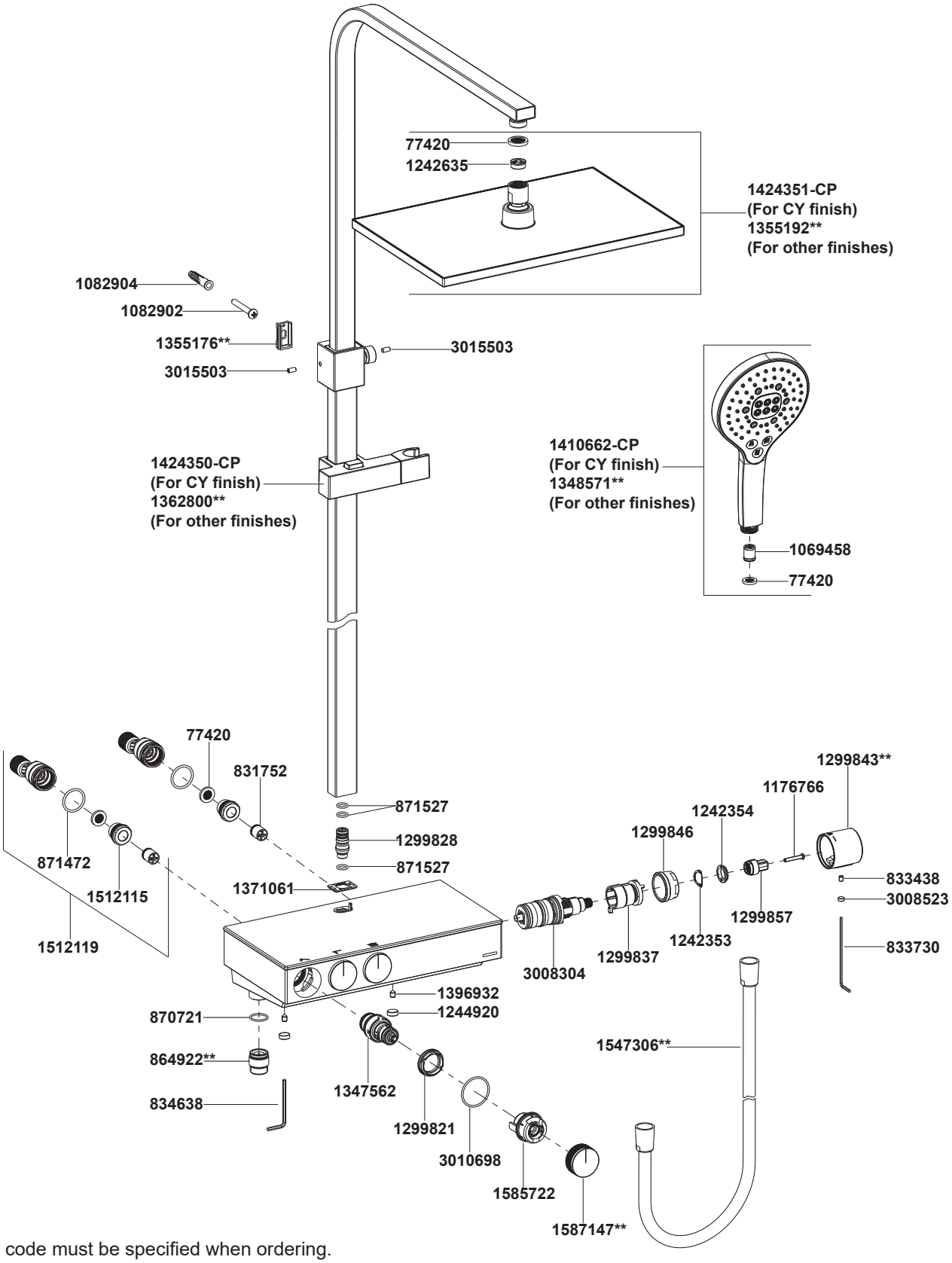

**Color code must be specified when ordering.

NOTE: For all Asia pacific regions (excluding China) add SP (SPxxxxxxx**) in front of the part number when ordering.