KOHLER

JULY Pull-out Lavatory Faucet

JULY
K-45435T-4

Product Specification:

Model	Spout		Handle	Includes	Finish
	Reach#	Height			
K-45435T-4	186.6mm	137.6mm	Lever	Spout, valve, handle, aerator, connection kit, pull-out spray	Polished Chrome (-CP)

#Reach: the distance between the spout and center of the faucet opening hole

Product Dimension:

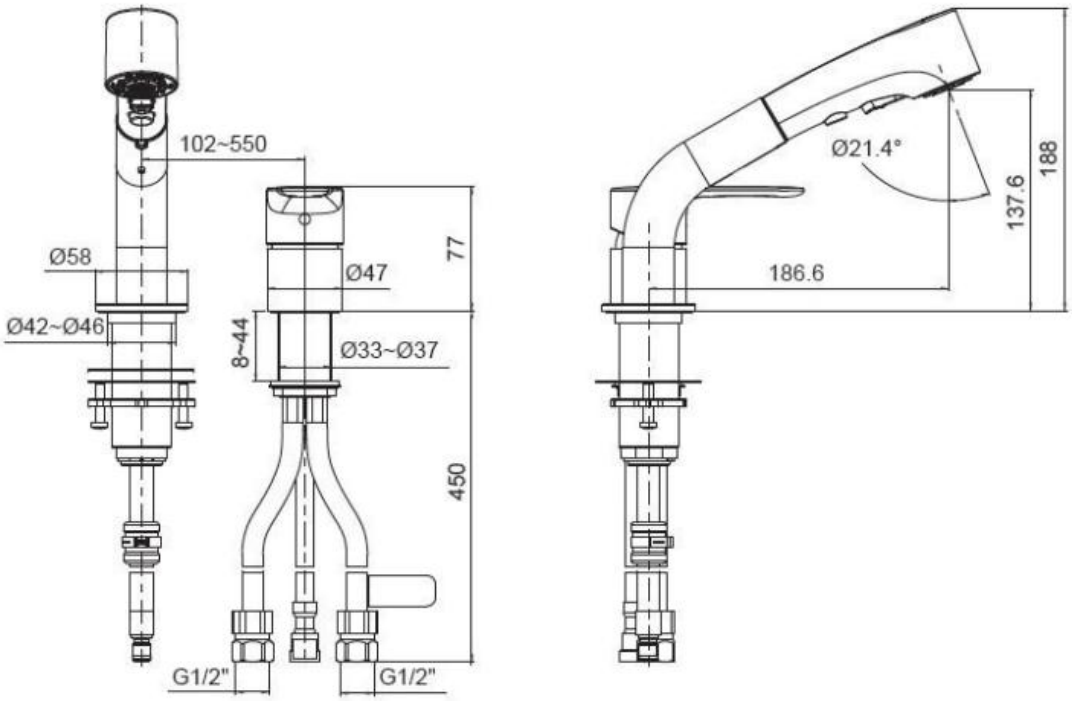

K-45435T-4

Please note that the above information are subject to change without notice.