KOHLER

TOOBI TALL LAVATORY FAUCET

TOOBI
8960T-9-CP

Product Specification:

Model	Spout		Includes	Finish
	Reach #	Height		
8960T-9-CP	116mm	199mm	Spout, handle, aerator, drain, connector, valve, inlet hose	Polished Chrome (-CP)

 # Reach: the distance between the spout and center of the faucet opening hole

Product Dimension:

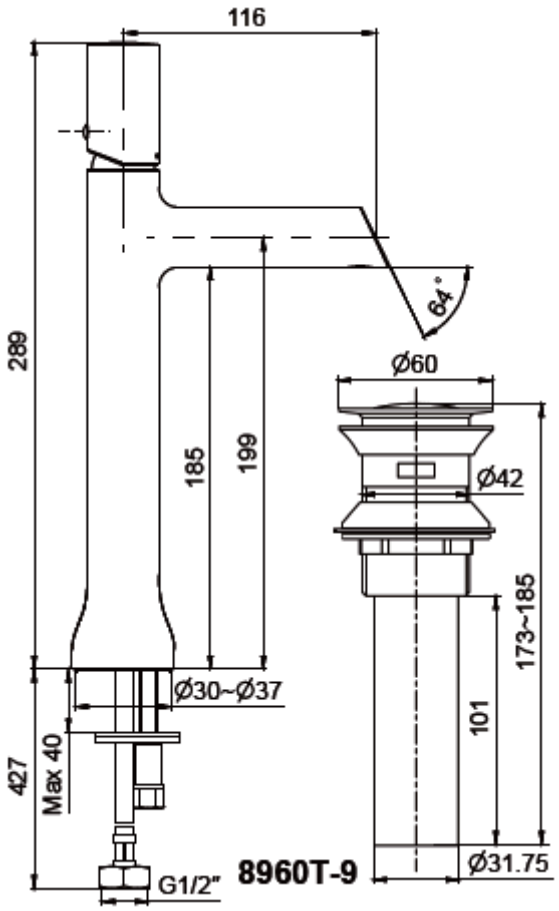

Please note that the above information are subject to change without notice.