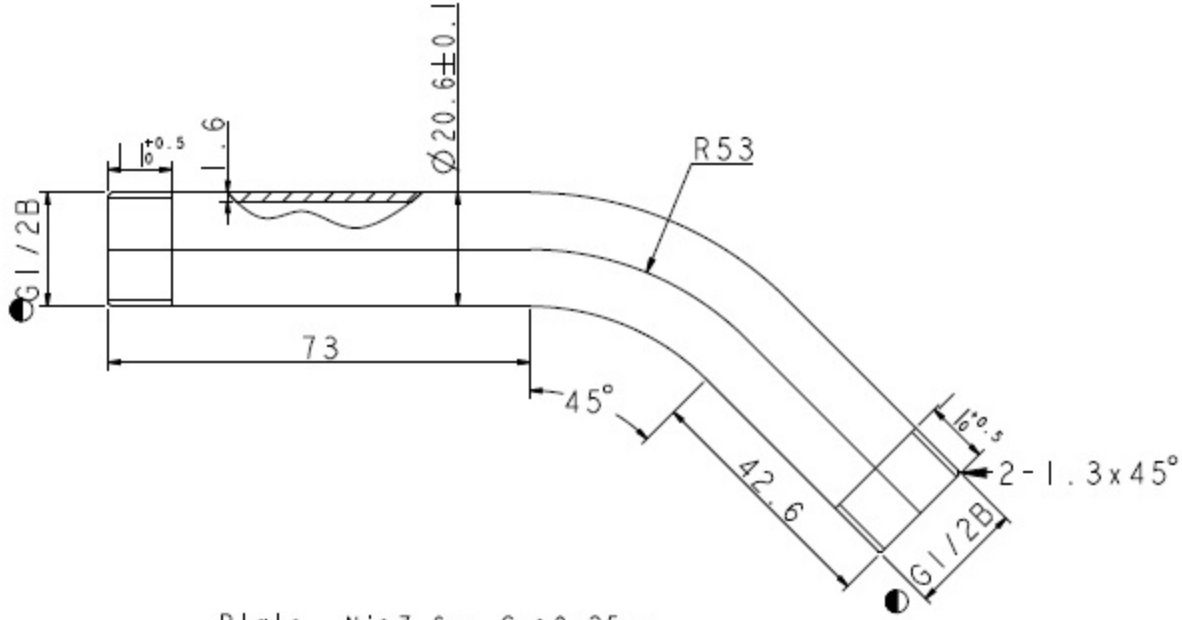

Plate Ni>7.6um,Cr>0.25um

Packaging 100Pcs/box