Kohler® Novita | BN330S

Round-front bidet toilet seat

Features

- Fits most round-front toilets
- Compact design is just over 5" high
- Stainless steel wand is automatically cleaned before and after each use
- Separate front and rear nozzles for maximum comfort and personalization
- Oscillating wash covers a wider area of cleansing
- Turbo setting produces a massaging effect as water moves back and forth
- Air-bubble wash offers a soft, gentle wash with effective cleansing
- Sittable lid for convenience
- Side-mounted control panel is accessible and easy to use
- Soft-close seat and lid prevent slamming



DISCONTINUED

1-800-4KOHLER (1-800-456-4537)
Kohler Co. reserves the right to make revisions without notice to product specifications.
For the most current specification sheet, go to www.kohler.com USA or www.kohler.ca Canada.
10-24-2026 17:56 - US-CA

Codes/Standards

Plumbing codes may require elongated toilets and elongated, open-front seats in public bathrooms.

ASME A112.4.2/CSA B45.16
UL 1431
CSA C22.2 No. 64
CSA C22.2 No. 68
cETL Listed
ETL Listed

Technical Information

All product dimensions are nominal.

Seat Shape Type:	Round-front
Seat Front Type:	Closed-front
Seat-Mounting Holes:	5-1/2" (140 mm)

Technology

- Two-stage energy-saving feature

Required Electrical Service

One dedicated circuit required, protected with Class A Ground-Fault Circuit-Interrupter (GFCI). Outside North America, this device may be known as a Residual Current Device (RCD).

120 V, 15 A, 60 Hz

Electrical Component Ratings

Power Cord Length:	39" (991 mm)

Warranty

See website for detailed warranty information.

DISCONTINUED

1-800-4KOHLER (1-800-456-4537)
Kohler Co. reserves the right to make revisions without notice to product specifications.
For the most current specification sheet, go to www.kohler.com USA or www.kohler.ca Canada.
10-24-2026 17:56 - US-CA

THE BOLD LOOK OF KOHLER.

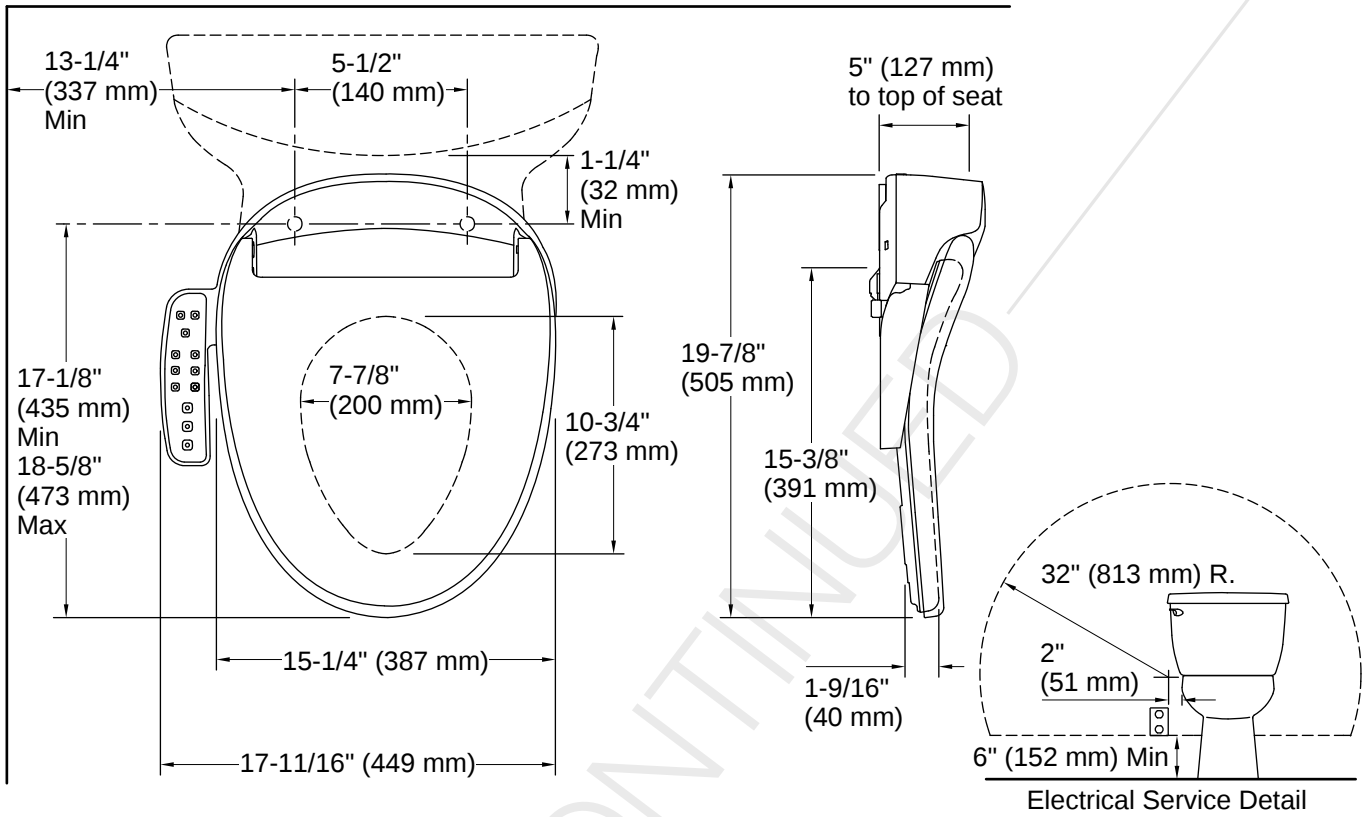

Installation

- Requires dedicated electrical GFCI circuit (120 V, 15 A, 60 Hz)

Installation Notes

Install this product according to the installation instructions.

Connect the seat to a cold water supply of drinking quality water at a pressure of 20 psi - 80 psi (139 kPa - 551 kPa).
Do not install this seat in a location where: (1) water might be splashed on the product or (2) excessive moisture, high humidity levels, or condensation is present. This will avoid damage to the electronic components.
NOTICE: Do not use an extension cord with this product.
NOTICE: Do not plug in the seat until instructed to do so in the installation guide. This will avoid possible product malfunction.
Locate the receptacle at least 6" (152 mm) above the floor, and within a 32" (813 mm) radius measured 2" (51 mm) from the bowl ledge.

DISCONTINUED

1-800-4KOHLER (1-800-456-4537)
Kohler Co. reserves the right to make revisions without notice to product specifications.
For the most current specification sheet, go to www.kohler.com USA or www.kohler.ca Canada.
10-24-2026 17:56 - US-CA

THE BOLD LOOK OF KOHLER.