安装说明

感应厨房水龙头

记录您的型号：
Record your model number: _____

English, page 20

KOHLER®

1562954-T2-**A**

Thank You for Choosing KOHLER

需要帮助？ 请联系我们的客户服务中心。

- 中国大陆：+(86) 800-820-2628, +(86) 400-820-2628
- 中国香港、中国澳门、中国台湾：+(852) 3125-7728
- **保养和清洁：** kohler.com.cn/support/care-and-cleaning/

质保

本产品支持包装所附合格证中的**科勒®电子淋浴阀芯和控制元件三年有限担保**。

重要信息

⚠ **警告： 使用电气产品时，务必始终遵守基本注意事项，包括：**

⚠ **危险： 存在触电风险。仅连接到受漏电保护器 (RCD) 保护的电路。**

⚠ **警告： 存在触电风险。需要接地。所有电气连接均应由资质合格的电工操作。**

⚠ **警告： 存在触电风险。维修前先断开电源。**

⚠ **警告： 存在人身伤害或财产损坏的风险。开始安装前先仔细通读说明。**

⚠ **小心： 存在淡水污染风险。此水龙头包含反虹吸保护。为防止水污染，请勿移除任何内部组件。**

⚠ **小心： 产品存在受损风险。本产品包含敏感的电子元件。请勿将装有化学品或清洁产品的敞口容器存放在本产品附近。清洁抹布或海绵在存放前必须用清水冲洗干净。**

重要信息! 请勿使用开关控制的电源插座（通常用于垃圾处理）为水龙头供电。

请遵守当地管道安装、建筑及电气条例。

如果安装可选电源，请在附近准备一个恒定的非开关 220 VAC 电源插座。

对于新安装，请在安装水槽之前安装水龙头和排水管。

工具和材料

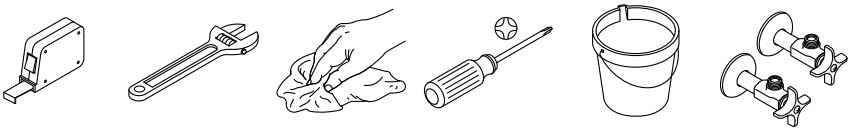

3/8 英寸

可选：
- 220 VAC 非开关电源插座
- 胶合板支架

开始之前

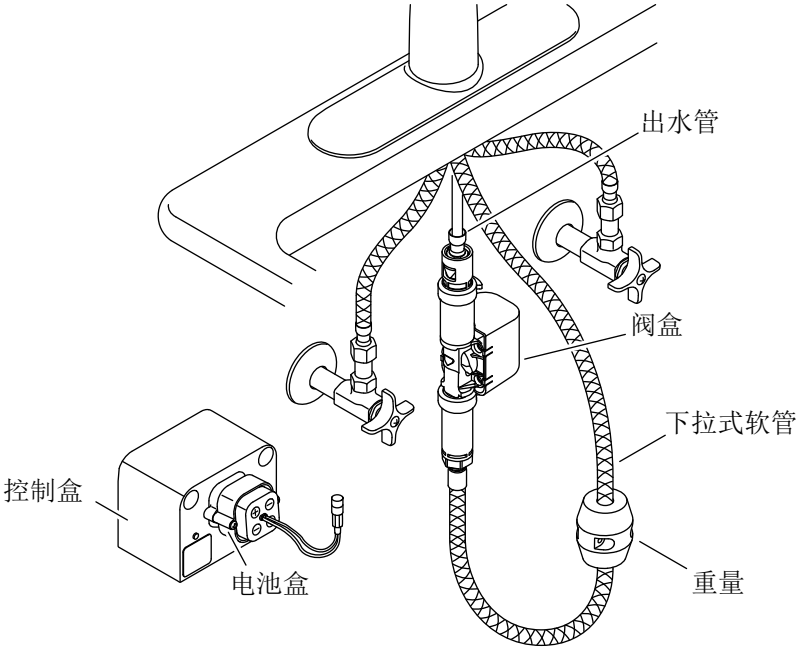

小心： 存在水流受限和产品损坏风险。安装时，供水软管和下拉式软管不得绷紧、扭结或扭曲。

注： 为维修预留足够的空间。

- ☐ 在安装水龙头之前，请确认水槽下方的区域可容纳所有必需的组件。
- ☐ 如果安装可选电源，请确认附近有非开关 220 VAC 电源插座。
- ☐ 关闭供水系统。

1. 安装水龙头

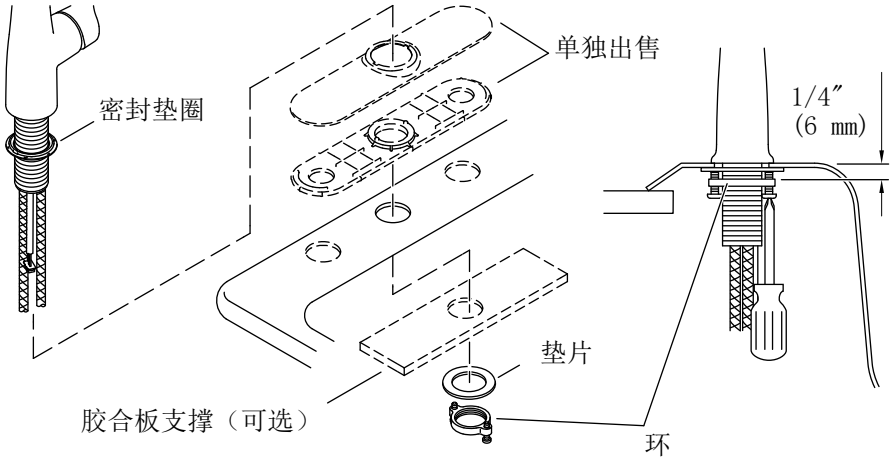

注： 把手方向设计在右侧。

注： 对于薄款不锈钢水槽，可考虑在垫圈和水槽之间安装 1/2 英寸（13 毫米）的胶合板支架（未随附）。

- ☐ 将密封垫圈安装到水龙头上，泡沫面朝下。
- ☐ **对于三孔水槽：** 将装饰罩和底板放在安装水龙头的孔上。将水龙头插入装饰盖和台面安装孔中，把手位于右侧。
- ☐ **对于单孔水槽：** 将水龙头插入台面安装孔中，把手位于右侧。
- ☐ 将螺钉部分拧入环中，直至螺钉从另一侧伸出 1/4 英寸（6 毫米）。
- ☐ 将垫圈和固定环穿过软管和电线，直至牙管根部。
- ☐ 将固定环旋紧在牙管上，直到垫圈接触到水槽底部。
- ☐ 调整固定环，使螺丝与水龙头的前后对齐。
- ☐ 拧紧螺丝。

2. 连接供水软管

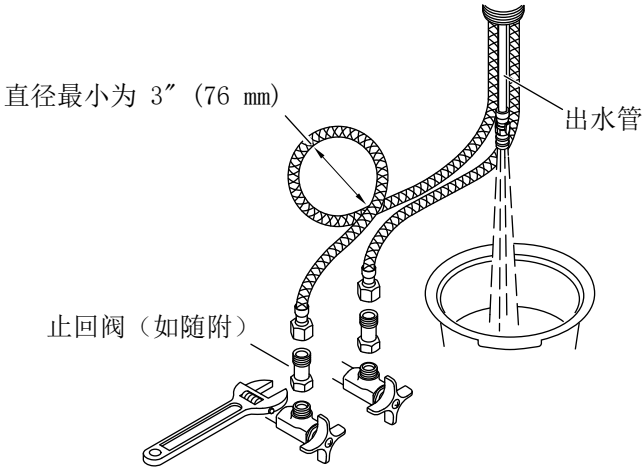

小心： 存在水流受限和产品损坏风险。供水软管不得绷紧、打结或扭曲。如果供水软管必须盘绕，则内径应保持为 3 英寸（76 毫米）。

- ☐ 如果有，在供水软管和供水阀之间安装止回阀。
- ☐ 将供水软管连接到供水阀并拧紧。
- ☐ 将水桶放在出水软管下方。
- ☐ 打开供水系统。
- ☐ 冲洗热水和冷水供水管道 1 分钟以去除杂质。
- ☐ 关闭供水系统。

3. 安装阀盒

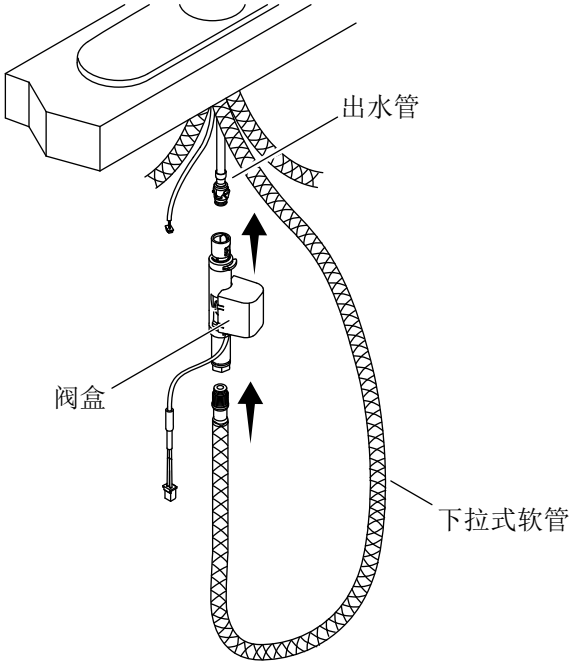

小心： 存在水流受限和产品损坏风险。安装时，下拉式软管不得绷紧、扭结或扭曲。

- ☐ 将下拉式软管手动拧紧到阀盒中。
- ☐ 将阀盒上的入口接头推到出水管上，直到听到咔嗒声。

4. 安装控制盒

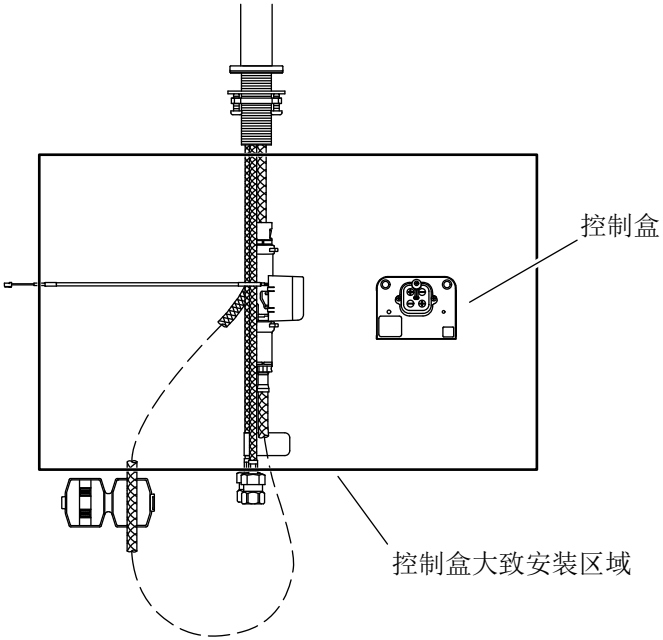

选项 1

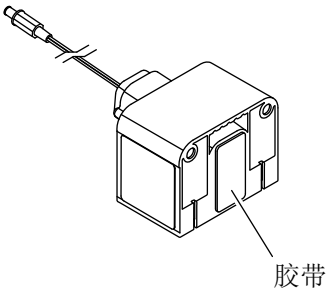

选项 2

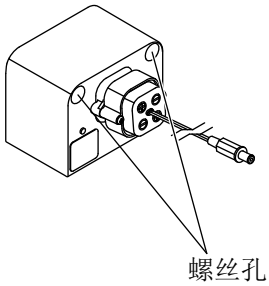

- ☐ 将控制盒安装到机柜背面的墙上。
- ☐ 安装控制盒前，请确认安装位置是否允许连接感应器线缆和电磁阀线缆。

- ☐ 在墙上标记控制盒的位置，并确定最佳安装方式：
- ☐ 选项 1：用胶带将控制盒粘到墙上。
- ☐ 选项 2：使用随附的两个螺丝将控制盒固定到墙上。
- ☐ 检查控制盒是否水平，电池盒是否牢固安装在控制盒上。

5. 连接控制盒。

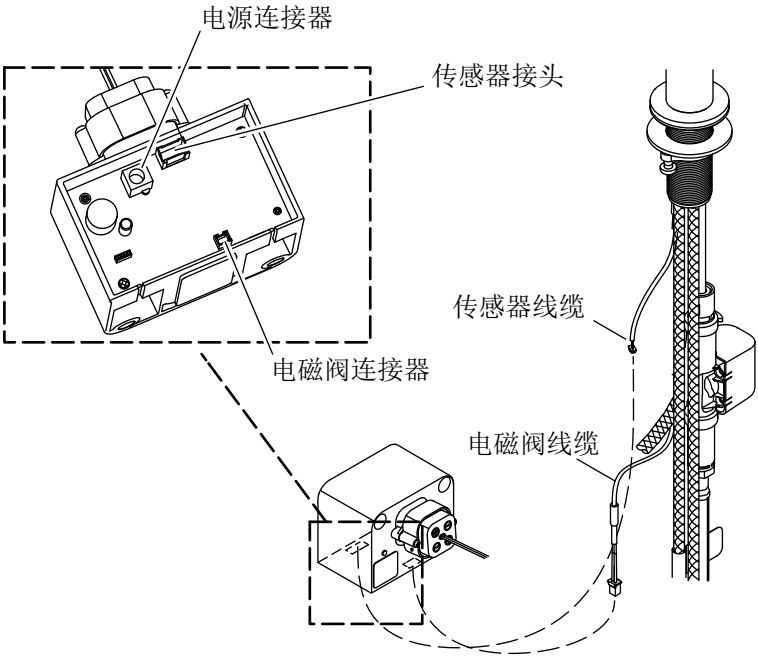

- ☐ 连接感应器线缆和电磁阀线缆。
- ☐ 确认线缆没有与下拉式软管缠结，并且下拉式软管可顺畅移动。

6. 安装交流电源（可选）

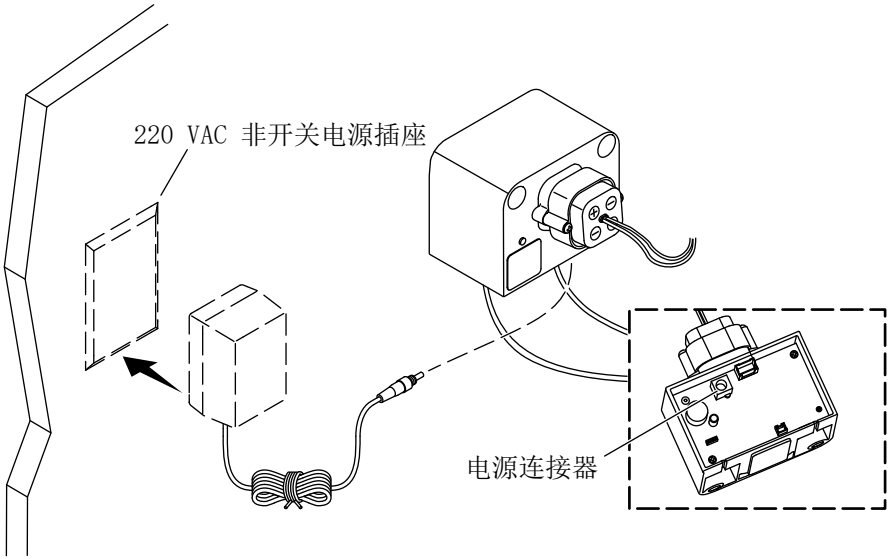

注意： 如果您的水龙头由电池供电，请参阅“安装电池”部分。

重要信息! 请勿使用开关控制的电源插座（通常用于垃圾处理）为水龙头供电。

注意： 在选择电源插座的位置时，确认交流电源线能够到达阀盒上的电源线。

- ☐ 在阀盒附近安装一个恒定的非开关 220 VAC 电源插座。
- ☐ 将电源（单独出售）插入电源插座中。
- ☐ 将电源线连接到控制盒上的电源接口。
- ☐ 将多余的电线固定在柜台下面。

7. 安装电池

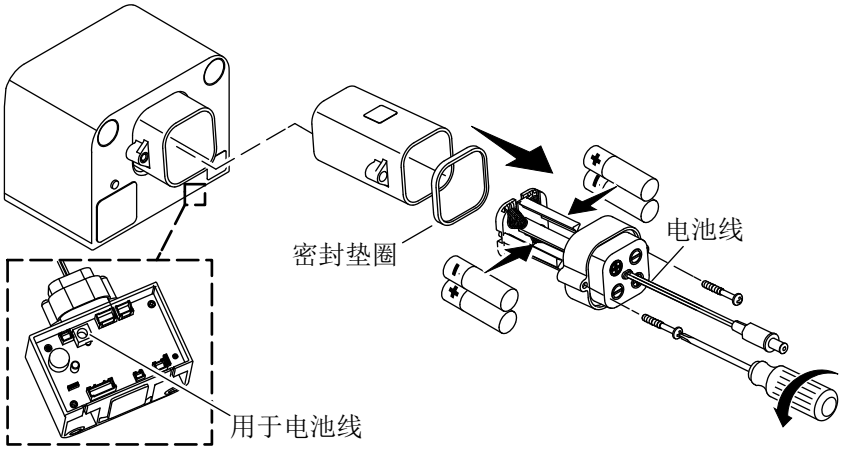

小心： 提防产品性能受损风险。请勿将锂离子电池与本产品一起使用。将锂离子电池暴露在水中可能会导致火灾。

重要信息! 请勿使用可充电电池或锂离子电池。

重要信息! 请勿混用新旧电池。

- ☐ 松开 2 颗螺丝，取下电池盒盖。
- ☐ 将 4 节 AA 电池按正确方向插入电池盒中。
- ☐ 确认密封垫圈存在。
- ☐ 重新安装盖子。
- ☐ 将电池盒放入控制盒的插槽中。
- ☐ 将电池盒线连接到阀盒的电源线。
- ☐ **对于电池更换：** 确认阀盒上的感应器超驰没有激活。请参阅“感应器超驰”一节。

8. 完成安装

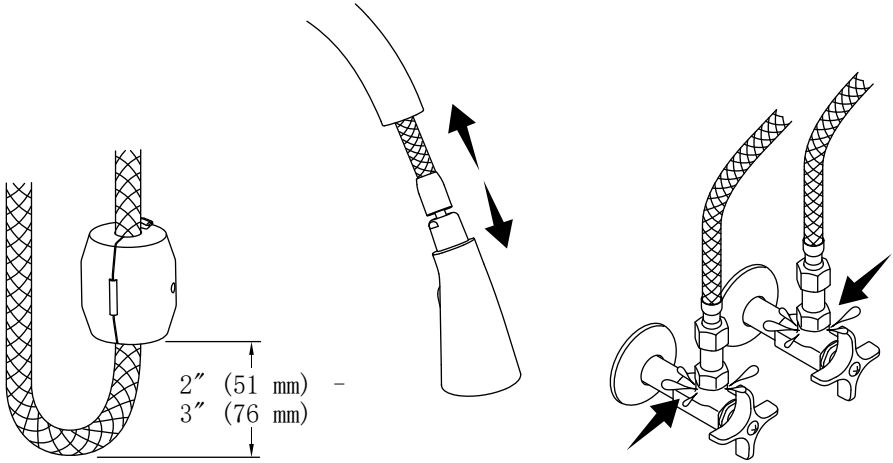

放置配重块

注： 确认下拉式软管配重块不会影响阀盒或电线的连接。

- ☐ 如图所示，将配重块放在下拉式软管上，挤压以连接卡扣。
- ☐ 抽拉下拉式软管，检查操作是否顺畅。
- ☐ 必要时调整配重块的位置。

检查泄漏

- ☐ 确认所有连接是否严密。
- ☐ 打开供水系统。
- ☐ 检查所有连接处有无漏水。
- ☐ 测试水龙头是否正常工作。请参阅“水龙头操作”部分。

水龙头操作

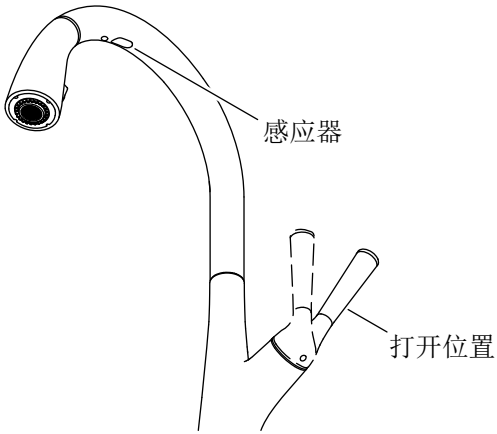

注： 如果长时间不使用，将把手恢复到关闭（直立）位置。

- ☐ 将把手向外旋转至打开位置，以启动水流。
- ☐ 调节把手，以获得所需水温。
- ☐ 在感应器下方挥手以关闭水流。
- ☐ 再次在感应器下方挥手，以重新启动水流。

功能

- ☐ **自动关闭：** 静置 4 分钟后，水流会自动关闭。
- ☐ **低电量 LED：** 红色 LED 每 3 秒闪烁一次，表示电量不足。水龙头将继续运作。当红色 LED 持续闪烁时，表示电源不可用，水龙头不工作。

感应器超驰

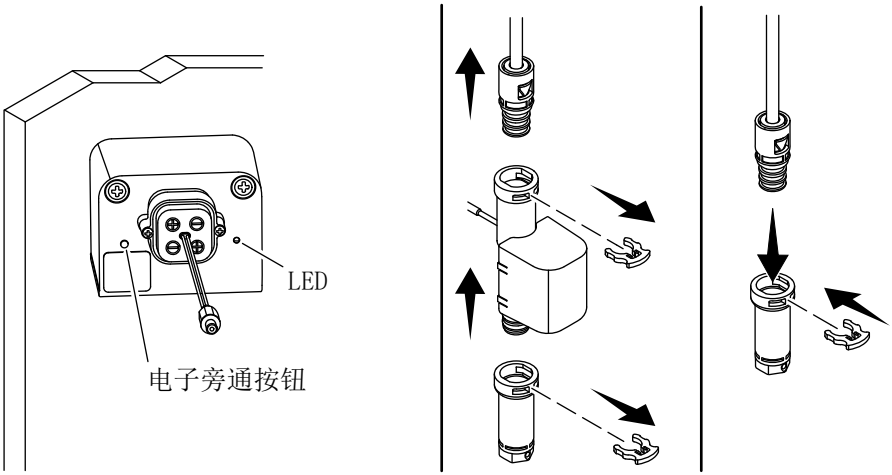

电子旁通

- ☐ 要以电子方式绕过电磁阀，请按下旁通按钮。红灯应闪烁 3 次。现在可以手动使用水龙头，感应器将被禁用。
- ☐ 要退出电子旁通，再次按下按钮，指示灯将闪烁 6 次。感应器现在处于活动状态，请验证把手是否打开以使用无接触模式。

手动旁通

- ☐ 如果电磁阀无法正常工作且无法通过电子方式绕过，则可以手动绕过电磁阀。
- ☐ 关闭水流，打开把手释放水压。
- ☐ 如图所示，拆下夹子。
- ☐ 断开电磁阀。
- ☐ 用拆下的一个夹子将接头连接在一起。
- ☐ 水龙头现在可以手动使用。
- ☐ 按照相反的步骤重新连接电磁阀。

清洁滤网

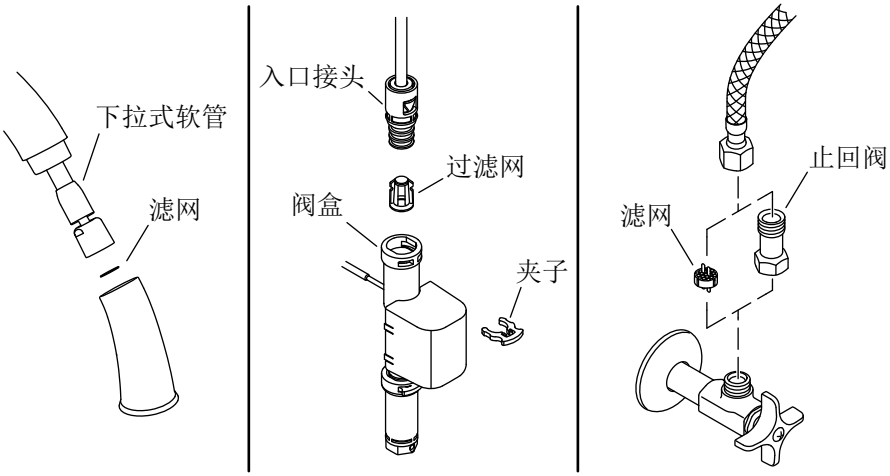

注： 供水滤网可能位于供水软管内部或止回阀内部（如有）。

喷头滤网

- ☐ 将把手转到“关闭”位置。
- ☐ 松开下拉式软管末端螺母的喷头。
- ☐ 取下并清洁喷头内的滤网。
- ☐ 重新装上滤网并重新连接喷头。

阀盒入口滤网

- ☐ 将把手转到“关闭”位置。
- ☐ 从出水管上断开阀盒。
- ☐ 从入口接头上拆下夹子。
- ☐ 取下并清洁入口滤网。
- ☐ 将入口滤网和入口接头重新安装到阀盒上。
- ☐ 将入口接头推到出水管上，直到听到咔嗒声。

供水滤网

- ☐ 关闭供水系统。

- ☐ 从供水阀处断开供水软管。
- ☐ 清洁软管入口内或止回阀内的滤网（如有）。
- ☐ 将供水软管重新连接至供水阀。
- ☐ 打开供水系统。

故障排除

小心： 产品存在受损风险。本产品包含敏感的电子元件。排除故障时，请小心不要损坏销钉和连接头。

本故障排除指南仅供一般辅助之用。如有服务和安装问题或疑虑，请联系我们的客户服务中心。

水龙头故障排除

故障表现	可能原因	建议措施
1. 无水流。	**A.** 供水阀已关闭。 **B.** 把手处于关闭位置。 **C.** 一个或多个软管扭结。 **D.** 电池电量不足或耗尽。 **E.** 一个或多个滤网堵塞。	**A.** 打开供水阀。 **B.** 将把手旋转到“打开”位置。请参阅“水龙头操作”部分。 **C.** 根据需要调整软管，以消除任何扭结。如果盘绕，则内径应保持为 3 英寸（76 毫米)。 **D.** 更换电池。请参阅“安装电池”一节。 **E.** 清洁滤网。请参阅“清洁滤网”一节。
2. 水流较小。	**A.** 供水阀部分关闭。 **B.** 把手部分关闭。 **C.** 一个或多个软管扭结或扭曲。 **D.** 一个或多个滤网或过滤器堵塞。 **E.** 膜片碎裂。	**A.** 完全打开供水阀。 **B.** 将把手旋转到“全开”位置。 **C.** 根据需要调整软管，以消除任何扭结。如果盘绕，则内径应保持为 3 英寸（76 毫米)。 **D.** 清洁滤网或过滤器。请参阅“清洁滤网”一节。 **E.** 更换阀盒组件。
3. 喷水模式不佳。	**A.** 喷嘴堵塞。	**A.** 在有水流的情况下，用手指摩擦喷嘴，以清除杂质。
4. 感应器不工作。	**A.** 没有电源。 **B.** 电池电量不足。 **C.** 系统处于电子旁通模式。 **D.** 把手关闭。	**A.** 确认电源已打开。 **B.** 检查电池。 **C.** 按下旁通按钮。注意指示灯闪烁 6 次。 **D.** 打开把手。

阀盒故障排除

故障表现	可能原因	建议措施
1. 阀盒漏水。	**A.** 软管连接不严密。 **B.** 内部泄漏。	**A. 小心：人身伤害或产品损坏风险。** 关闭电源和供水系统。检查所有连接点。酌情调整。 **B.** 更换阀盒。
2. 阀芯启动时没有发出“咔嗒”声。	**A.** 阀盒电线连接松动。 **B.** 阀芯失灵。	**A.** 检查阀盒电线连接。 **B.** 更换阀盒。

传感器故障排除

故障表现	可能原因	建议措施
1. 传感器间歇性工作。	**A.** 传感器镜头上有杂质。 **B.** 传感器检测到水蒸气。 **C.** 手部动作太快。	**A.** 使用中性肥皂水轻轻清除传感器镜头上的杂质。 **B.** 旋转出水嘴，以去除水蒸气。 **C.** 将手放在传感器下方更长时间，以便感应。

EN

Installation Instructions

Touchless Kitchen Faucet

Thank You for Choosing KOHLER

Need help? Contact our Customer Care Center.

- Mainland China: +(86) 800-820-2628, +(86) 400-820-2628
- Hong Kong (China), Macau (China), Taiwan (China): +(852) 3125-7728
- **Care and cleaning:** kohler.com.cn/support/care-and-cleaning/

Warranty

This product is covered under the **Three-Year Limited Warranty for KOHLER® Digital Shower Valves and Controls**, found in the packed Compliance Certification.

Important Information

WARNING: When using electrical products, basic precautions should always be followed, including the following:

DANGER: Risk of electric shock. Connect only to a circuit protected by a Residual Current Device (RCD).

WARNING: Risk of electric shock. Grounding is required. A qualified electrician should make all electrical connections.

WARNING: Risk of electric shock. Disconnect the power before servicing.

WARNING: Risk of injury or property damage. Read all instructions thoroughly before beginning installation.

CAUTION: Risk of fresh water contamination. This faucet contains back-siphonage protection. To prevent water contamination, do not remove any internal components.

CAUTION: Risk of product damage. This product contains sensitive electronic components. Do not store open containers of chemical or cleaning products near this product. Cleaning rags or sponges must be rinsed with fresh water before storage.

IMPORTANT! Do not use a switch-controlled electrical outlet (typically used for garbage disposals) to provide power to the faucet.

Follow all local plumbing, building, and electrical codes.

If installing the optional power supply, provide a constant unswitched 220 VAC electrical outlet within reach.

For new installations, install the faucet and drain to the sink before installing the sink.

Tools and Materials

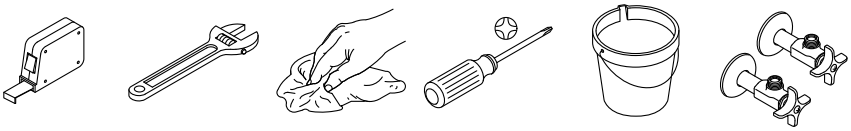

Optional:
- 220 VAC Unswitched Electrical Outlet
- Plywood Support

Before You Begin

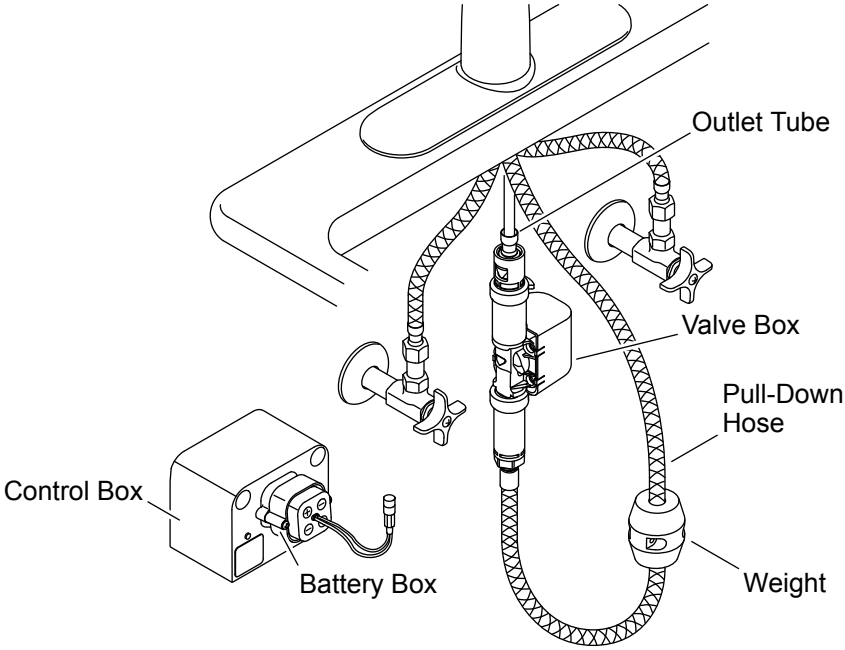

CAUTION: Risk of restricted water flow and product damage. The supply hoses and pull-down hose must not be taut, kinked, or twisted when installed.

NOTE: Allow adequate clearance for servicing.

- ☐ Before installing the faucet, verify that the area under the sink can accommodate all required components.
- ☐ If installing the optional power supply, verify that there is an unswitched 220 VAC electrical outlet within reach.
- ☐ Turn OFF the water supplies.

1. Install the Faucet

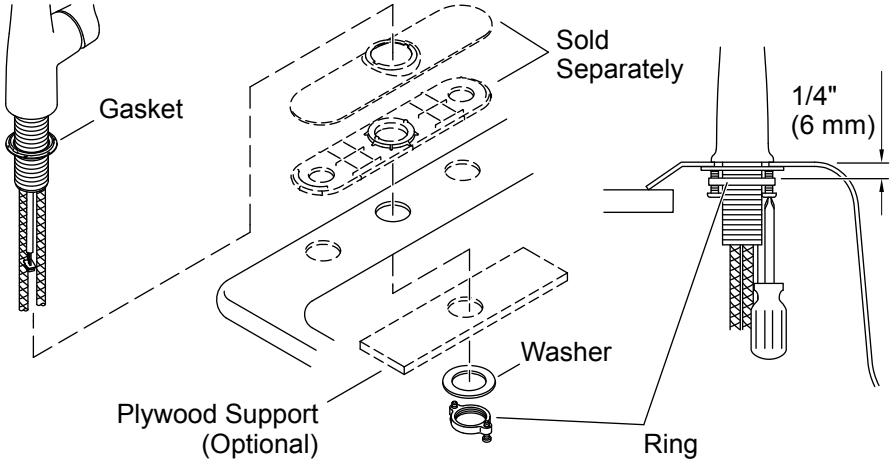

NOTE: Handle orientation is designed to be on the right.

NOTE: For thin gauge stainless steel sinks, consider installing a 1/2" (13 mm) plywood support (not supplied) between the washer and the sink.

- ☐ Install the gasket to the faucet with the foam side down.
- ☐ **For Three-Hole Sinks:** Place the escutcheon and undercover (sold separately) over the faucet holes. Insert the faucet, with the handle on the right, through the escutcheon and the mounting surface.
- ☐ **For Single-Hole Sinks:** Insert the faucet through the mounting surface with the handle on the right.
- ☐ Partially thread the screws into the ring until they extend 1/4" (6 mm) out the opposite side.
- ☐ Slide the washer and ring over the hoses and wires and up to the shank.
- ☐ Thread the ring onto the shank until the washer contacts the underside of the sink.
- ☐ Adjust the ring to align the screws with the front and back of the faucet.
- ☐ Securely tighten the screws.

2. Connect the Supply Hoses

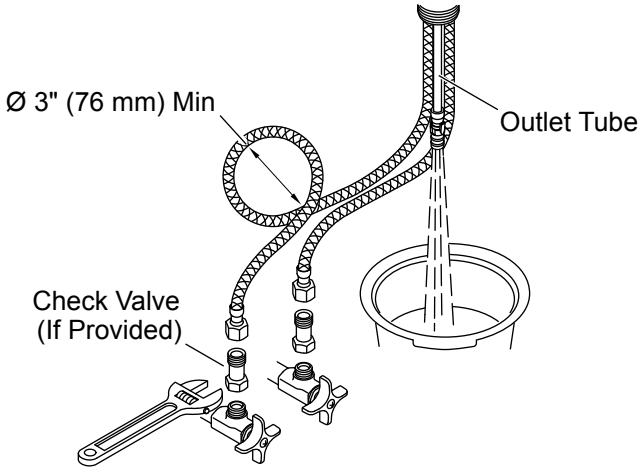

CAUTION: Risk of restricted water flow and product damage. The supply hoses must not be taut, kinked, or twisted. If the supply hoses must be coiled, maintain an inside diameter of 3" (76 mm).

- ☐ If provided, install the check valves between the supply hoses and the supply stops.
- ☐ Connect and tighten the supply hoses to the supply stops.
- ☐ Place a bucket under the outlet hose.
- ☐ Turn ON the water supplies.
- ☐ Flush hot and cold water for 1 minute to remove any debris.
- ☐ Turn OFF the water supplies.

3. Install the Valve Box

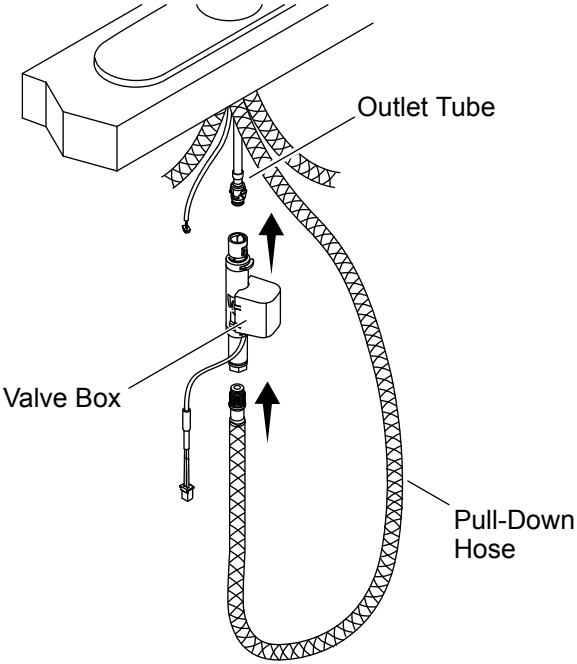

CAUTION: Risk of restricted water flow and product damage. The pull-down hose must not be taut, kinked, or twisted when installed.

- ☐ Handtighten the pull-down hose into the valve box.
- ☐ Push the inlet fitting on the valve box onto the outlet tube until a click is heard.

4. Install the Control Box

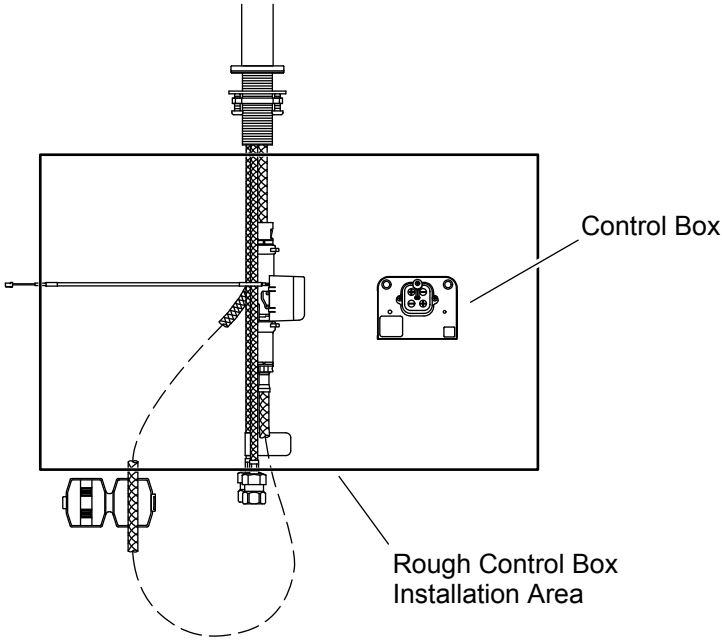

Option 1

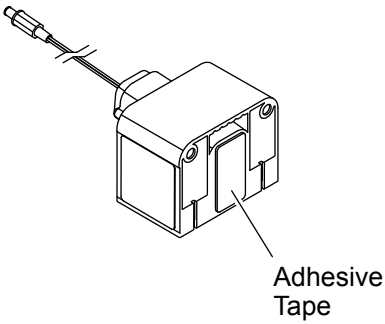

Option 2

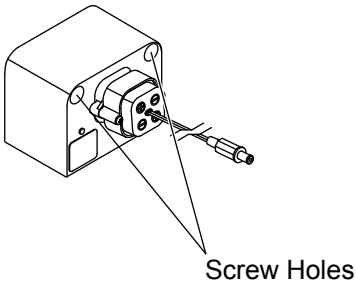

- ☐ Attach the control box to the wall on the back of the cabinet.
- ☐ Before mounting the control box, verify that the location allows for the sensor cable and solenoid valve cable to be connected.
- ☐ Mark the control box location on the wall and determine the best mounting option:
- ☐ Option 1: Use the adhesive tape to attach the control box to the wall.
- ☐ Option 2: Use the two provided screws to secure the control box to the wall.
- ☐ Verify that the control box is level and that the battery box stays securely mounted in the control box.

5. Connect the Control Box

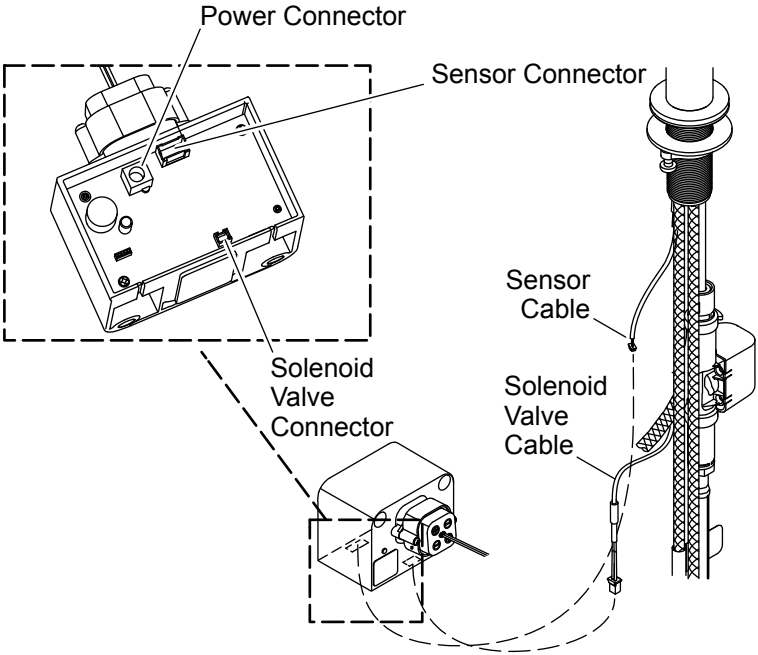

- ☐ Connect the sensor cable and solenoid valve cable.
- ☐ Verify that the cables are not tangled with the pull-down hose and that the pull-down hose moves smoothly.

6. Install the AC Power Adaptor (Optional)

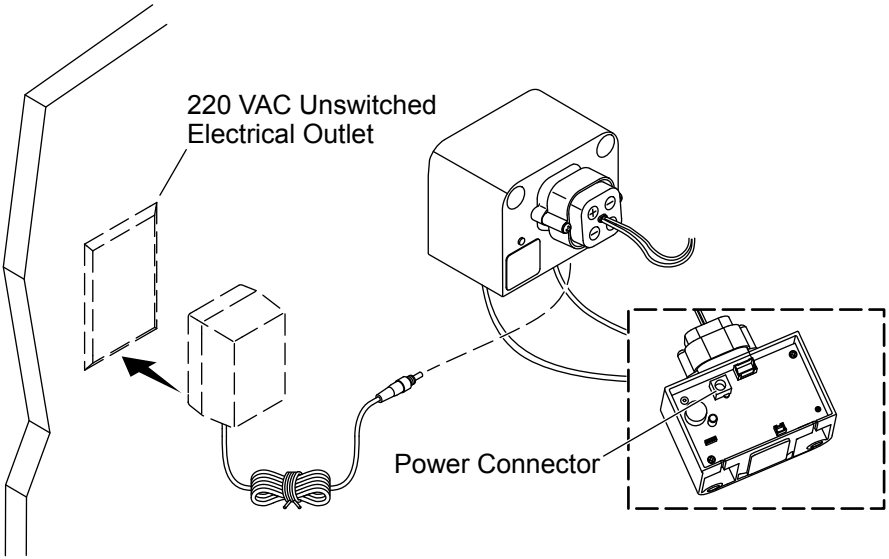

NOTICE: If your faucet will be powered with batteries, refer to the “Install the Batteries” section.

IMPORTANT! Do not use a switch-controlled electrical outlet (typically used for garbage disposals) to provide power to the faucet.

NOTICE: When selecting a location for the electrical outlet, verify that the AC power supply cord will reach the power cord on the valve box.

- ☐ Install a constant unswitched 220 VAC electrical outlet within reach of the valve box.
- ☐ Plug the AC power adaptor into the electrical outlet.
- ☐ Connect the power supply cord to the power connector on the control box.
- ☐ Secure any extra cords under the counter.

7. Install the Batteries

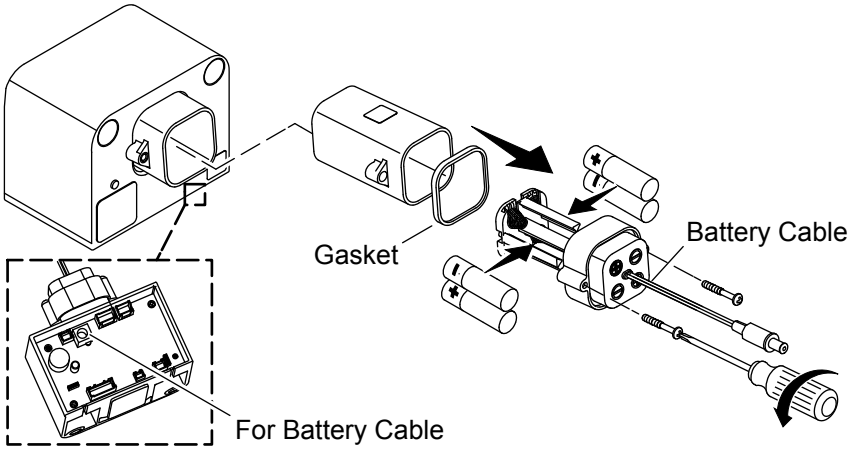

⚠ **CAUTION: Risk of property damage.** Do not use lithium ion batteries with this product. Exposing lithium ion batteries to water can result in a fire.

IMPORTANT! Do not use rechargeable or lithium ion batteries.

IMPORTANT! Do not mix old and new batteries.

- ☐ Loosen the two screws to remove the battery box cover.
- ☐ Insert four AA batteries in the correct orientation in the battery box.
- ☐ Verify that the gasket is present.
- ☐ Reinstall the cover.
- ☐ Place the battery box into the slot in the control box.
- ☐ Connect the battery box cord to the power cord on the valve box.
- ☐ **For Battery Replacement:** Verify that the sensor override on the valve box has not been activated. Refer to the “Sensor Override” section.

8. Complete the Installation

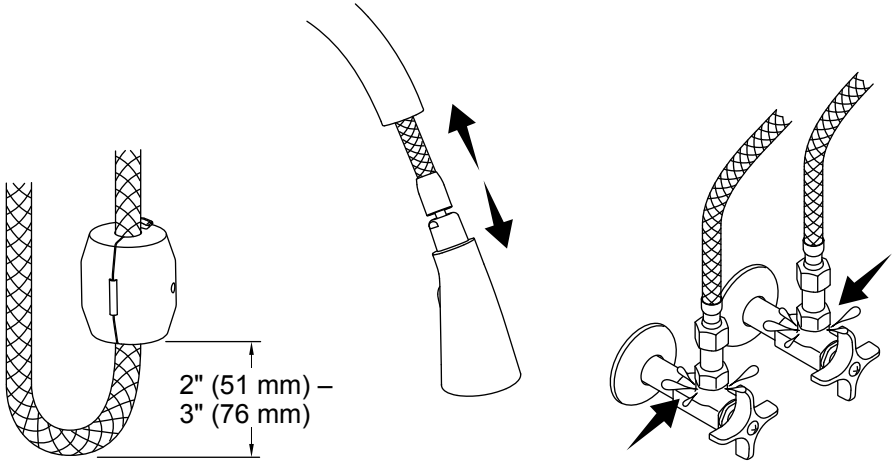

Position the Weight

NOTE: Verify that the pull-down hose weight will not interfere with the valve box or wire connections.

- ☐ Position the weight on the pull-down hose as shown and squeeze to connect the clasp.
- ☐ Extend and retract the pull-down hose to check for smooth operation.
- ☐ Adjust the location of the weight as necessary.

Check for Leaks

- ☐ Verify that all connections are tight.
- ☐ Turn ON the water supplies.
- ☐ Check all connections for leaks.
- ☐ Test the faucet for proper operation. Refer to the “Faucet Operation” section.

Faucet Operation

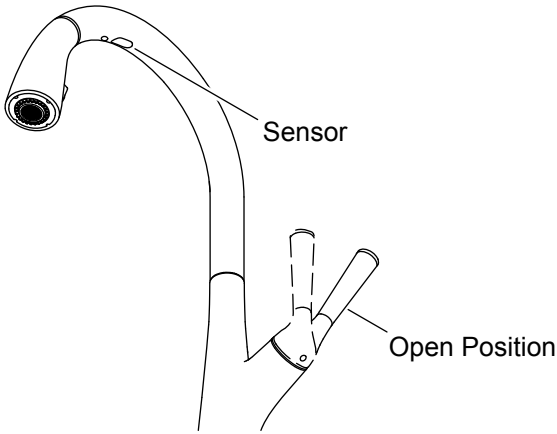

NOTE: For extended periods of nonuse, return the handle to the closed (upright) position.

- ☐ Rotate the handle outward to the open position to start water flow.
- ☐ Adjust the handle to the desired water temperature.
- ☐ Wave your hand under the sensor to turn OFF the water.
- ☐ Wave your hand under the sensor again to restart the water flow.

Features

- ☐ **Automatic shut-off:** After 4 minutes of inactivity, the water will automatically shut OFF.
- ☐ **Low battery LED:** The red LED will flash every 3 seconds to indicate low power. Faucet will remain operational. When the red LED flashes continuously, power is unavailable and faucet is not operational.

Sensor Override

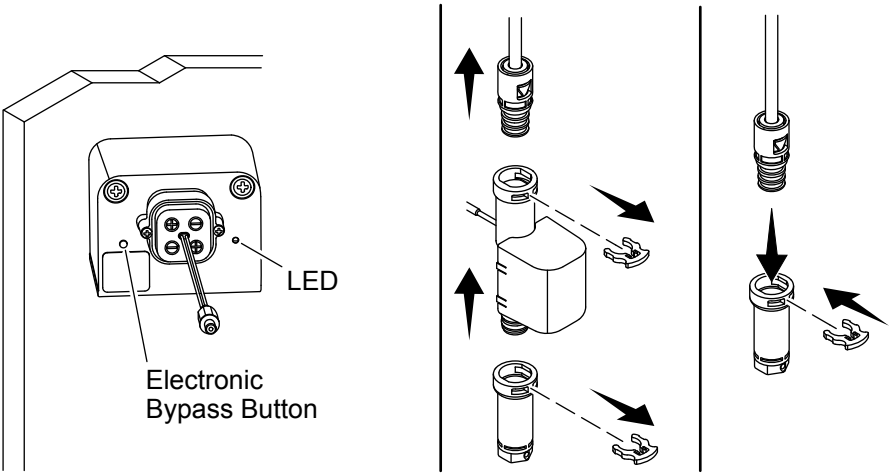

Electronic Bypass

- ☐ To electronically bypass the solenoid valve, push the bypass button. The red light should flash 3 times. The faucet can now be used manually and the sensor will be disabled.
- ☐ To exit the electronic bypass, push the button again, the light will flash 6 times. The sensor is now active, verify that the handle is open to use touchless mode.

Manual Bypass

- ☐ The solenoid valve can be bypassed if the solenoid valve fails to operate properly and cannot be electronically bypassed.
- ☐ Turn OFF the water and open the handle to relieve the water pressure.
- ☐ Remove the clips as shown.
- ☐ Disconnect the solenoid valve.
- ☐ Connect the fittings together with one of the clips that were removed.
- ☐ The faucet can now be used manually.
- ☐ Reconnect the solenoid valve by following these steps in reverse.

Cleaning the Screens

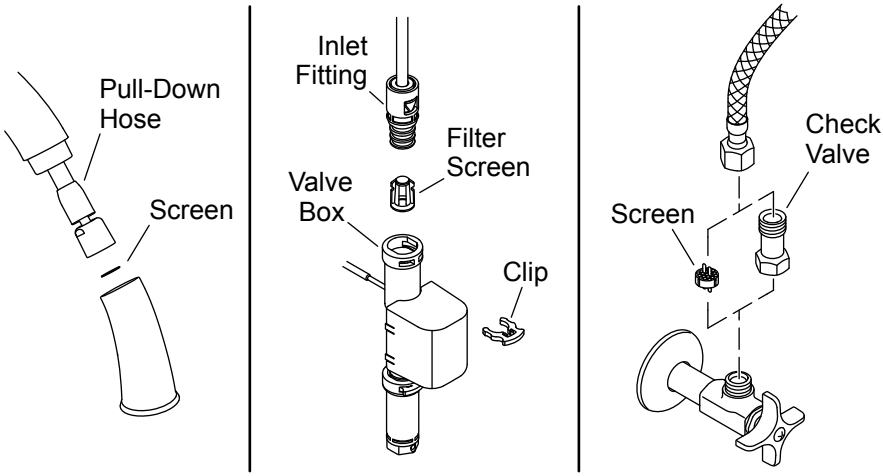

NOTE: The supply screen may be located inside the supply hose or inside the check valve (if present).

Sprayhead Screen

- ☐ Turn the handle to the closed position.
- ☐ Disconnect the sprayhead from the nut at the end of the pull-down hose.
- ☐ Remove and clean the screen inside the sprayhead.
- ☐ Reinsert the screen and reconnect the sprayhead.

Valve Box Inlet Screen

- ☐ Turn the handle to the closed position.
- ☐ Disconnect the valve box from the outlet tube.
- ☐ Remove the clip from the inlet fitting.
- ☐ Remove and clean the inlet screen.
- ☐ Reinstall the inlet screen and inlet fitting to the valve box.
- ☐ Push the inlet fitting onto the outlet tube until a click is heard.

Supply Screen

- ☐ Turn OFF the water supplies.
- ☐ Disconnect the supply hose from the supply stop.
- ☐ Clean the screen inside the hose inlet or inside the check valve (if present).
- ☐ Reconnect the supply hose to the supply stop.
- ☐ Turn ON the water supplies.

Troubleshooting

CAUTION: Risk of product damage. This product contains sensitive electronic components. Use care not to damage pins and connectors during troubleshooting.

This troubleshooting guide is for general aid only. For service and installation issues or concerns, contact our Customer Care Center.

Faucet Troubleshooting

Symptoms	Probable Cause	Recommended Action
1. No water flow.	**A.** The supply stops are closed. **B.** The handle is in the closed position. **C.** One or more hoses are kinked. **D.** Battery power is low or exhausted. **E.** One or more screens are clogged.	**A.** Open the supply stops. **B.** Rotate the handle to the open position. Refer to the “Faucet Operation” section. **C.** Adjust the hoses as needed to remove any kinks. If coiled, maintain an inside diameter of 3" (76 mm). **D.** Replace the batteries. Refer to the “Install the Batteries” section. **E.** Clean the screens. Refer to the “Cleaning the Screens” section.
2. Low water flow.	**A.** The supply stops are partially closed. **B.** The handle is partially closed. **C.** One or more hoses are kinked or twisted. **D.** One or more screens or filters are clogged. **E.** Cracked diaphragm.	**A.** Fully open the supply stops. **B.** Rotate the handle to the full open position. **C.** Adjust the hoses as needed to remove any kinks. If coiled, maintain an inside diameter of 3" (76 mm). **D.** Clean the screens or filters. Refer to the “Cleaning the Screens” section. **E.** Replace the valve box assembly.

Symptoms	Probable Cause	Recommended Action
3. Poor spray pattern.	**A.** The spray nozzles are clogged.	**A.** Rub your finger over the nozzles with water running to dislodge debris.
4. Sensor not working.	**A.** No electrical power. **B.** Low battery. **C.** System in electronic bypass mode. **D.** Handle is closed.	**A.** Verify that electrical power is turned ON. **B.** Check the batteries. **C.** Press the bypass button. Look for the light to flash 6 times. **D.** Open the handle.

Valve Box Troubleshooting

Symptoms	Probable Cause	Recommended Action
1. Water leaks from the valve box.	**A.** Hose connections are not secure. **B.** Internal leak.	**A.** **CAUTION: Risk of personal injury or product damage.** Turn OFF the main power and water supply. Check all connections. Make adjustments as needed. **B.** Replace the valve box.
2. No audible "click" when the valve is activated.	**A.** Loose valve box wire connection. **B.** Valve is not functioning.	**A.** Check the valve box wire connection. **B.** Replace the valve box.

Sensor Troubleshooting

Symptoms	Probable Cause	Recommended Action
1. Intermittent sensor operation.	**A.** Debris on the sensor lens. **B.** Sensor is detecting steam. **C.** Hand motion is too fast.	**A.** Use mild soap and water to gently remove debris from the sensor lens. **B.** Rotate the spout away from the steam. **C.** Hold hand under the sensor longer to allow detection.

THE BOLD LOOK OF KOHLER®

©2024 Kohler Co.

1562954-T2

1562954-T2-**A**