Archer® | K-1946-RR

60" x 30" alcove bath, right drain

Features

- Comfort Depth® offers a lower apron with generous soaking depth
- Integral apron
- Integral lumbar support
- Textured bottom surface
- Coordinates with other products in the Archer collection



Available Colors/Finishes

Color tiles intended for reference only.

0 White

1-800-4KOHLER (1-800-456-4537)
Kohler Co. reserves the right to make revisions without notice to product specifications.
For the most current specification sheet, go to www.kohler.com USA or www.kohler.ca Canada.
10-09-2026 01:26 - US-CA

Codes/Standards

ADA compliant when installed to the specific requirements of these regulations.

ADA

CSA B45.5/IAPMO Z124
ASTM E162
ASTM E662
ADA
ICC/ANSI A117.1

Technical Information

All product dimensions are nominal.

Drain Location:	Right
Drain Hole Diameter:	2-1/4" (57 mm)
Minimum Flat for Door:	2-9/16" (66 mm)
Basin Area, Bottom:	45-1/8" x 19-3/4" (1147 mm x 502 mm)
Basin Area, Top:	52-1/16" x 22-1/16" (1323 mm x 561 mm)
Water Depth:	13-1/16" (331 mm)
Water Capacity:	57 gal (215.8 L)
Minimum Floor Load:	46 lbs/ft^2
Weight:	73 lbs (33.1 kg)

Material

- Acrylic

Recommended Products/Accessories

- [object Object]23726 Drain treatment
- K-23732 Tub & shower cleaner

Required Products/Accessories

- K-7259 Brass toe tap bath drain

Warranty

See website for detailed warranty information.

KOHLER® Plastic Baths and Shower Bases Lifetime Limited Warranty

1-800-4KOHLER (1-800-456-4537)
Kohler Co. reserves the right to make revisions without notice to product specifications.
For the most current specification sheet, go to www.kohler.com USA or www.kohler.ca Canada.
10-09-2026 01:26 - US-CA

THE BOLD LOOK OF KOHLER.

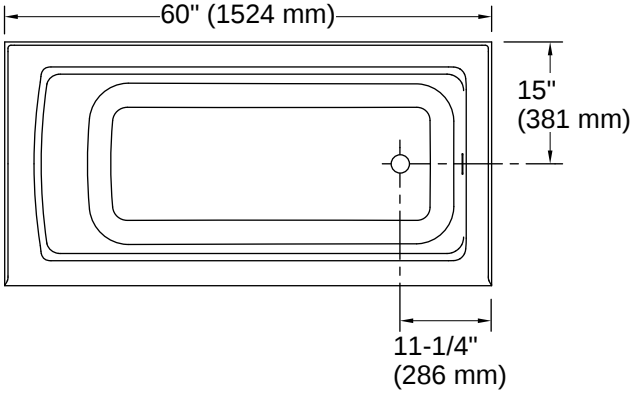

No change in measurements if connected with drain illustrated. (K-7259)

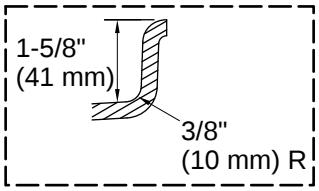

Integral Flange Detail

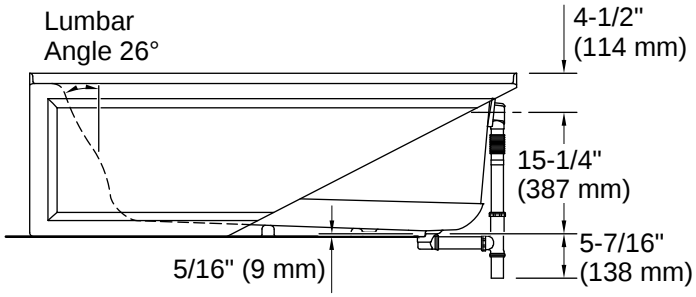

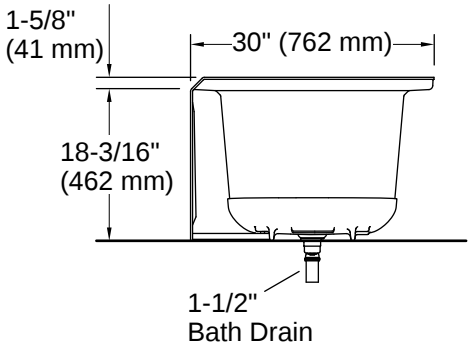

Installation

- Alcove
- Integral flange
- Right drain

Installation Notes

Install this product according to the installation instructions.

Measure your actual product for rough-in details.
The hot water supply should be 70% of the capacity of the bath or greater. Installations will vary.
ADA compliant when installed to the specific requirements of these regulations.

1-800-4KOHLER (1-800-456-4537)
Kohler Co. reserves the right to make revisions without notice to product specifications.
For the most current specification sheet, go to www.kohler.com USA or www.kohler.ca Canada.
10-09-2026 01:26 - US-CA

THE BOLD LOOK OF KOHLER.