KOHLER®
SERVICE PARTS

PURIST

24982T-4 Semi-Pro Kitchen Faucet

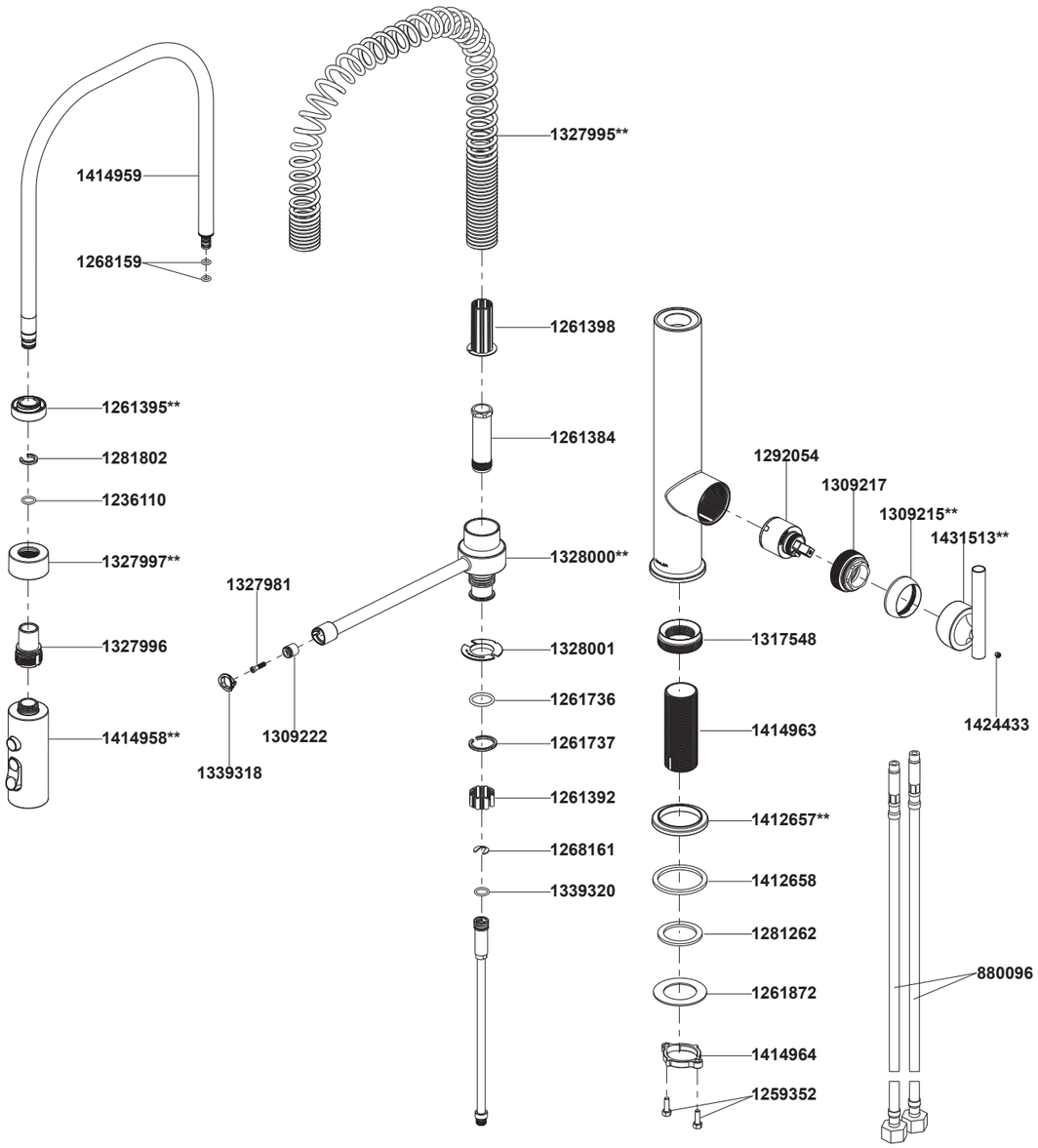

**Color code must be specified when ordering.
NOTE: For all Asia pacific regions (excluding China) add SP (SPxxxxxxx**) in front of the part number when ordering.

KOHLER®
INSTALLATION INSTRUCTIONS

PURIST

24982T-4 Semi-Pro Kitchen Faucet

BEFORE YOU BEGIN

All information is based on the latest product information available at the time of publication. Kohler Co. reserves the right to make changes in product characteristics, packaging, or availability at any time without notice.

Please leave these instructions for the consumer. They contain important information.

NOTE:
1. Flush the water supply pipes thoroughly to remove debris.
2. For new installations, install the faucet to sink before installing.
3. The highest working pressure for spray is 0.5MPa(5bar). If it exceeds 0.5MPa(5bar), a pressure reducer is needed. The highest water and environment temperature is 60ºC. Please keep spray from heater, or it may become damaged and cause injury to the user.

STANDARD APPLICABLE

Special model meets or exceeds the following at date of manufacture: TIS

ROUGH-IN DIMENSIONS

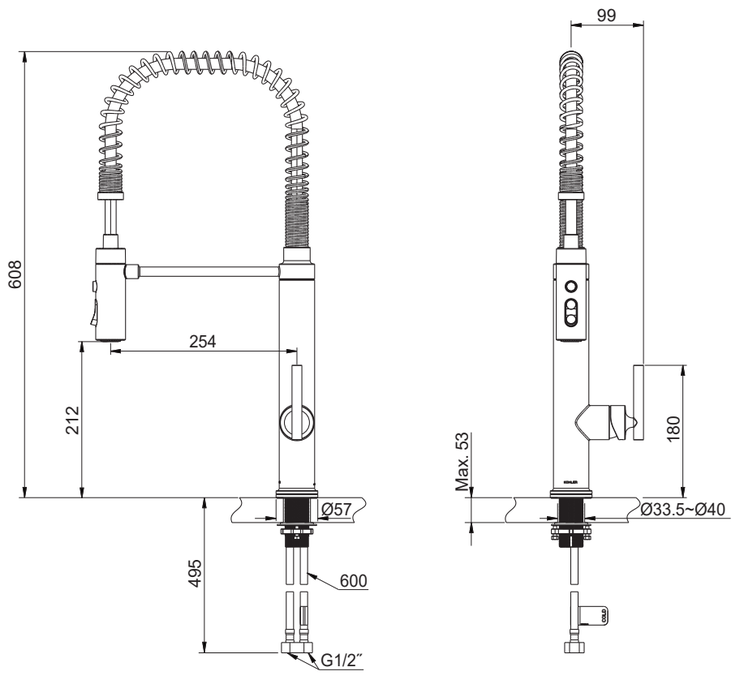

INSTALLATION

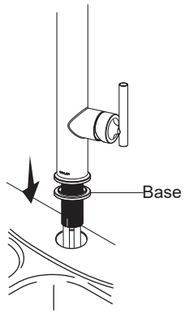

1. Slide the base over the shank until it is against the faucet bottom. Insert the faucet assembly into the hole, and make sure the handle is on the right side.

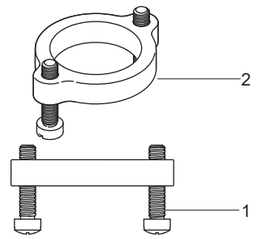

2. Partially thread the screws(1) into the ring(2).

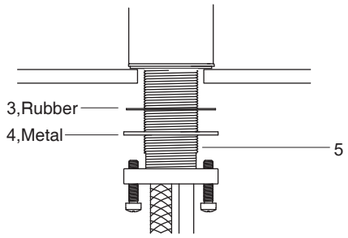

3. Slide the washers(3,4) onto the shank(5) and thread the ring onto the shank.

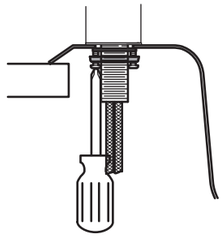

4. Tighten the screws to fix the faucet.

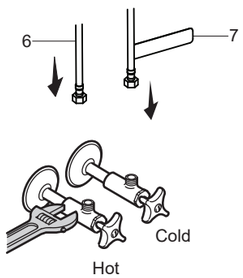

5. Connect the hoses(6) to water supplies. The hose with “COLD” label(7) should be connected to cold water supply.

INSTALLATION CHECKOUT

Ensure that all coupling nuts are tight. Ensure that the handle is in the off position. Check for leaks. Repair as needed.

Unscrew the spray(8). While rotating the handle, flush the hot and cold water for about one minute. Reinstall the spray into the hose(9), adjust the hose and make spray hook in the positon of bracket.

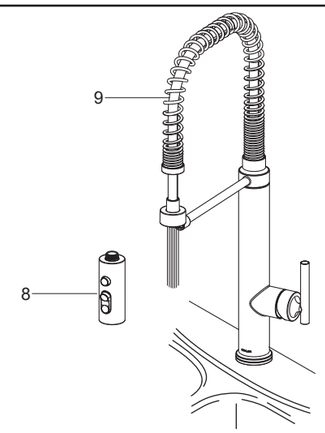

OPERATION INSTRUCTION

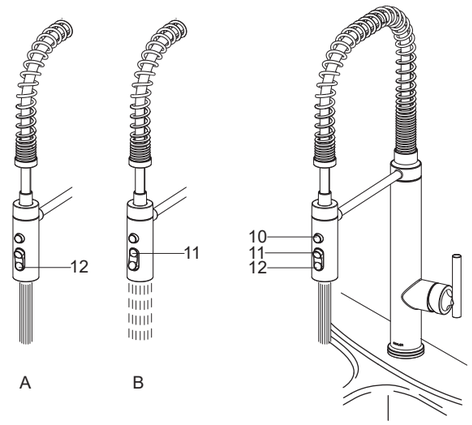

Turn on the handle gently. Turn clockwise for cold water, turn counter-clockwise for hot water.

Press the button(11), the water flow is as figure B shown;
Press the button(12), the water flow is as figure A shown;
Press and hold the button(10), it will increase water flow.

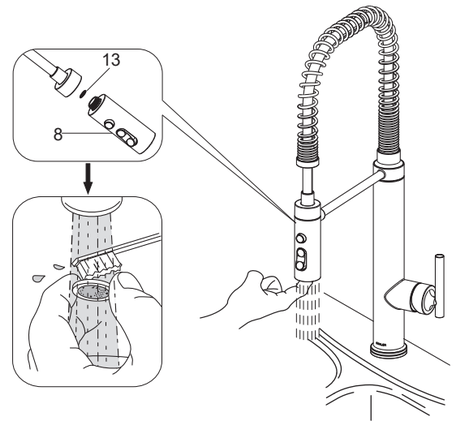

Faucet Maintenance:

With the water running, rub the nozzles to dislodge debris.

To improve the flow, disconnect the spray(8) and clean the screen washer(13). Reassemble.

CLEANING INSTRUCTIONS

All Finishes: Clean the finish with mild soap and warm water. Wipe entire surface completely dry with clean soft cloth. Many cleaners may contain chemicals, such as ammonia, chlorine, toilet cleaner etc, which could adversely affect the finish and are not recommended for cleaning.

Do not use abrasive cleaners or solvents on Kohler faucets and fittings.

"LEAD FREE" is marked on the back of the faucet signifying its compliance with the United States AB1953