Border® | K-27931

Elevated Quiet-Close™ round-front toilet seat

Features

- 2-1/2" (64 mm) raised seating surface provides a more comfortable height for those with limited mobility
- Eye-pleasing design mimics a conventional toilet seat, with no unattractive riser to detract from your bathroom decor
- Round closed-front seat
- Fits most round-front toilets
- Contoured seat for user comfort
- Grip-Tight installation hardware makes it easy to fasten the seat – everything is done from above the bowl
- Quick-Release™ functionality allows seat to be removed easily from toilet for convenient cleaning
- Grip-Tight bumpers hold seat firmly in place
- Quiet-Close™ elongated lid and seat prevents slamming



Available Colors/Finishes

Color tiles intended for reference only.

0 White

1-800-4KOHLER (1-800-456-4537)
Kohler Co. reserves the right to make revisions without notice to product specifications.
For the most current specification sheet, go to www.kohler.com USA or www.kohler.ca Canada.
11-12-2026 02:16 - US-CA

Codes/Standards

Plumbing codes may require elongated toilets and elongated, open-front seats in public bathrooms.

IAPMO/ANSI Z124.5

Technical Information

All product dimensions are nominal.

Seat Shape Type:	Round-front
Seat Front Type:	Closed-front
Seat-Mounting Holes:	5-1/2" (140 mm)

Material

- Plastic construction

Warranty

See website for detailed warranty information.

KOHLER® One-Year Limited Warranty

1-800-4KOHLER (1-800-456-4537)
Kohler Co. reserves the right to make revisions without notice to product specifications.
For the most current specification sheet, go to www.kohler.com USA or www.kohler.ca Canada.
11-12-2026 02:16 - US-CA

THE BOLD LOOK OF KOHLER.

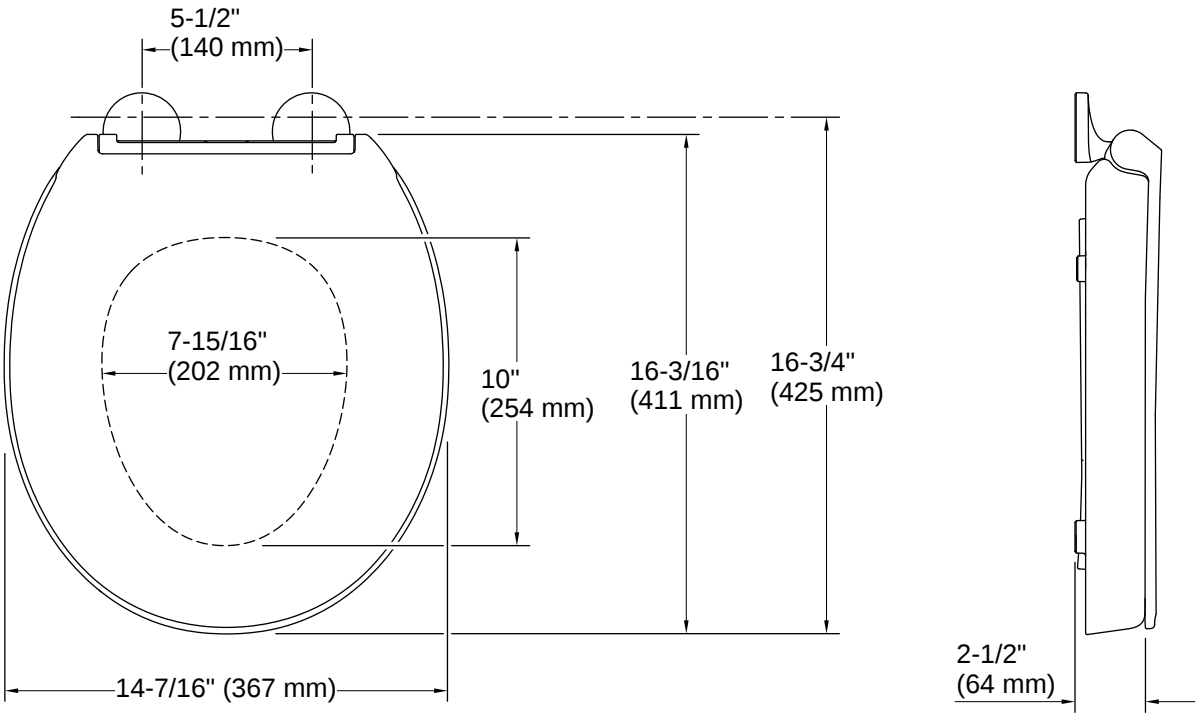

Installation

- Installs easily and securely onto your existing toilet bowl
- For residential use only

Installation Notes

Install this product according to the installation instructions.

1-800-4KOHLER (1-800-456-4537)
Kohler Co. reserves the right to make revisions without notice to product specifications.
For the most current specification sheet, go to www.kohler.com USA or www.kohler.ca Canada.
11-12-2026 02:16 - US-CA

THE BOLD LOOK OF KOHLER.