KOHLER. Faucets

Atom™

Single-handle bathroom sink faucet, 8.3 lpm

K-28825T-4

Features

- Single handle provides on/off activation, volume, and temperature control
- 3-1/2" (90 mm) spout height
- 4-5/16" (110 mm) spout reach
- 2.2 gpm (8.3 lpm) maximum flow rate at 60 psi (4.14 bar)
- KOHLER® ceramic disc valves exceed industry longevity standards for a lifetime of durable performance
- Coin aerator is easy to remove for maintenance
- Includes pop-up drain with lift rod

Material

- Premium metal construction for durability and reliability
- KOHLER finishes resist corrosion and tarnishing

Installation

- Single hole
- Supply lines included

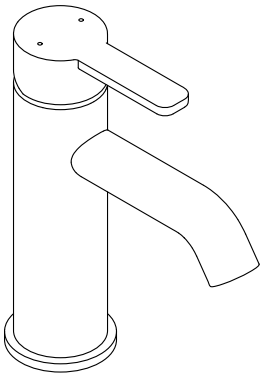

Codes/Standards

Plumbing Standards
GB 18145

See website for detailed warranty information.

KOHLER Faucets

Atom™

Single-handle bathroom sink faucet, 8.3 lpm

K-28825T-4

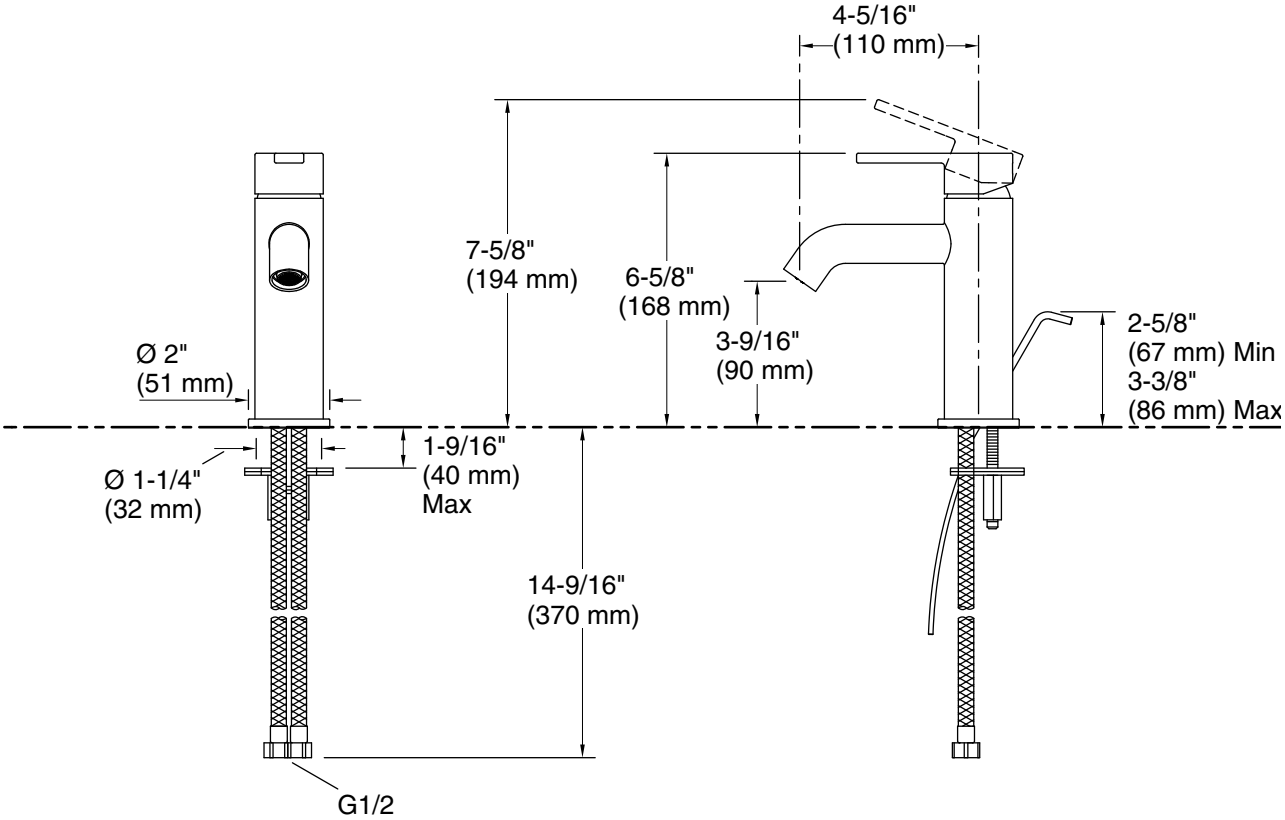

Technical Information

All product dimensions are nominal.

Faucet flow rate:	2.2 gal/min (8.3 l/min)
Drain included:	Yes
Drain with overflow:	Yes

Notes

Install this product according to the installation instructions.