KOHLER. Faucets

Fore Arc™

Single-handle bathroom sink faucet, cold only, 5.2 lpm

K-29546T-4CD

Features

- Single Lever handle provides on/off activation and volume control
- For use with cold water line only
- 3-13/16" (97 mm) spout height
- 4-11/16" (118 mm) spout reach
- 1.4 gpm (5.2 lpm) maximum flow rate at 60 psi (4.14 bar)
- KOHLER® ceramic disc valves exceed industry longevity standards for a lifetime of durable performance
- Drain sold separately
- Includes installation hardware

Material

- Premium material construction for durability and reliability
- KOHLER finishes resist corrosion and tarnishing

Installation

- Deck-mount
- Single-hole installation

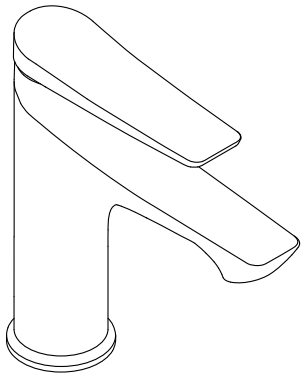

Codes/Standards

Plumbing Standards
TIS 2067-2552

See website for detailed warranty information.

KOHLER. Faucets

Fore Arc™

Single-handle bathroom sink faucet, cold only, 5.2 lpm

K-29546T-4CD

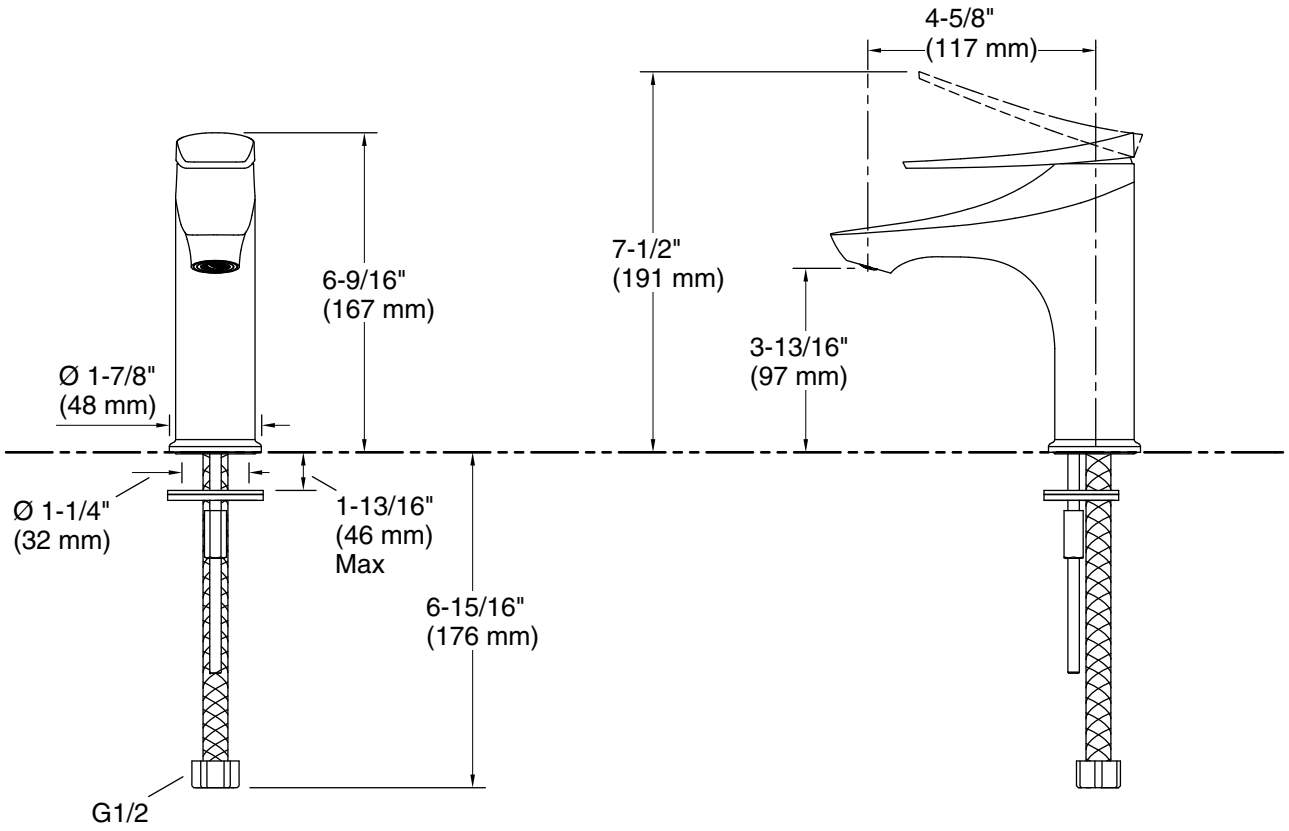

Technical Information

All product dimensions are nominal.

Faucet flow rate:	1.37 gal/min (5.2 l/min)
Drain with overflow:	Yes
Drain tailpiece included:	No

Spout:

Spout reach:	4-3/4" (120 mm)

Notes

Install this product according to the installation guide.