Devour™ | K-36181

1 hp (input) garbage disposal

Features

- 1 hp (input) heavy-duty permanent magnet motor powers through your toughest food waste
- Powerful 2700 RPM motor (under load) provides high-efficiency grind performance
- Sound-reducing construction provides remarkably quiet operation
- Heavy-duty cast stainless steel grind components offer superior grind capability and enhanced resistance to wear and tear
- 33.8 oz grind chamber
- Easy access LED-illuminated reset button notifies you if a reset is required
- Continuous feed lets you add scraps as you go
- Attached power cord
- Chrome-plated mounting assembly provides excellent wear resistance
- Removable baffle prevents splashing and boosts noise reduction
- Safe for septic systems, delivering dependable, hassle-free performance
- Backed by a 10-year limited warranty
- Box includes: Disposal, stainless steel stopper, removable baffle, discharge tube kit, attached power cord, mounting hardware



Sustainability

Available Colors/Finishes

Color tiles intended for reference only.

MNT Mint

1-800-4KOHLER (1-800-456-4537)
Kohler Co. reserves the right to make revisions without notice to product specifications.
For the most current specification sheet, go to www.kohler.com USA or www.kohler.ca Canada.
11-20-2026 21:00 - US-CA

Codes/Standards

ASSE 1008
UL 430
CSA C22.2 No. 68
cUL Listed

Material

- Durable stainless steel construction

Warranty

See website for detailed warranty information.

KOHLER® Garbage Disposer Limited Warranty

1-800-4KOHLER (1-800-456-4537)
Kohler Co. reserves the right to make revisions without notice to product specifications.
For the most current specification sheet, go to www.kohler.com USA or www.kohler.ca Canada.
11-20-2026 21:00 - US-CA

THE BOLD LOOK OF KOHLER.

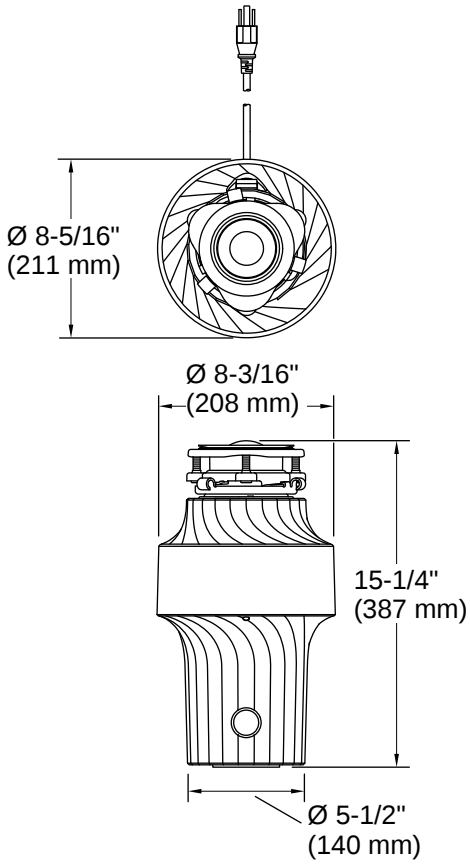

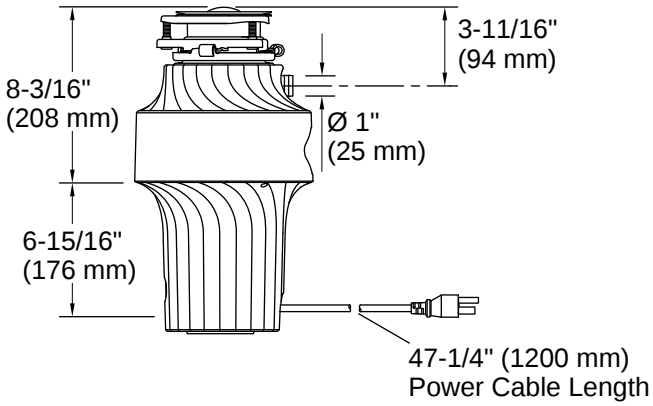

Installation

- Under-sink
- Standard three-bolt mounting assembly

Installation Notes

Install this product according to the installation instructions.

1-800-4KOHLER (1-800-456-4537)
Kohler Co. reserves the right to make revisions without notice to product specifications.
For the most current specification sheet, go to www.kohler.com USA or www.kohler.ca Canada.
11-20-2026 21:00 - US-CA

THE BOLD LOOK OF KOHLER