Statement™ | K-39315-NFC

35" x 52" mirror

Features

- Asymmetrical shape
- Mirror can be mounted in eight different orientations
- Coordinates with other KOHLER products and Statement™ collection



Available Colors/Finishes

Color tiles intended for reference only.

NA NA Not Applicable

1-800-4KOHLER (1-800-456-4537)
Kohler Co. reserves the right to make revisions without notice to product specifications.
For the most current specification sheet, go to www.kohler.com USA or www.kohler.ca Canada.
11-12-2026 11:26 - US-CA

Codes/Standards

ANSI Z97.1 (Tempered Glass)
CPSC 16CFR 1201

Technical Information

All product dimensions are nominal.

Lighting Included:	No

Material

- Premium metal and mirrored glass construction
- KOHLER finishes resist corrosion and tarnishing

Warranty

See website for detailed warranty information.

KOHLER® One-Year Limited Warranty

1-800-4KOHLER (1-800-456-4537)
Kohler Co. reserves the right to make revisions without notice to product specifications.
For the most current specification sheet, go to www.kohler.com USA or www.kohler.ca Canada.
11-12-2026 11:26 - US-CA

THE BOLD LOOK OF KOHLER.

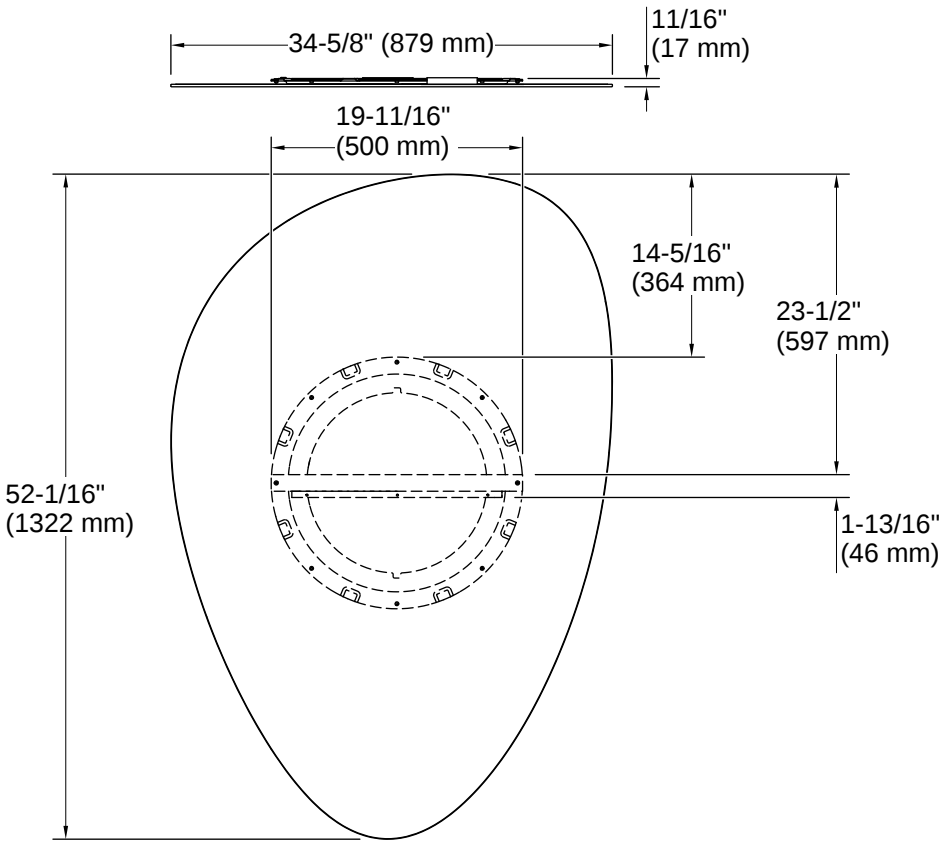

Installation

- Mounting kit ensures quick and easy installation

Installation Notes

Install this product according to the installation instructions.

1-800-4KOHLER (1-800-456-4537)
Kohler Co. reserves the right to make revisions without notice to product specifications.
For the most current specification sheet, go to www.kohler.com USA or www.kohler.ca Canada.
11-12-2026 11:26 - US-CA

THE BOLD LOOK OF KOHLER