Statement™ | K-40176-R

Right-hand trip lever

Features

- Right-hand Polished Chrome trip lever
- For use with Statement toilets
- Additional trip lever finishes available
- Coordinates with products in the Statement™ collection



Sustainability

WATER-SAVING DESIGN

Available Colors/Finishes

Color tiles intended for reference only.

	SN	Vibrant Polished Nickel
	AF	Vibrant French Gold
	BN	Vibrant Brushed Nickel
	BV	Vibrant Brushed Bronze
	BL	Matte Black
	2MB	Vibrant Brushed Moderne Brass
	TT	Vibrant Titanium

1-800-4KOHLER (1-800-456-4537)
Kohler Co. reserves the right to make revisions without notice to product specifications.
For the most current specification sheet, go to www.kohler.com USA or www.kohler.ca Canada.
11-12-2026 11:18 - US-CA

THE BOLD LOOK OF KOHLER

Codes/Standards

None Applicable

Technical Information

All product dimensions are nominal.

Height:	1-9/16" (40 mm) - 1-9/16" (40 mm)

Recommended Products/Accessories

- K-39289-RA Two-piece elongated toilet with skirted trapway, 1.28 gpf

Warranty

See website for detailed warranty information.

KOHLER® One-Year Limited Warranty

1-800-4KOHLER (1-800-456-4537)
Kohler Co. reserves the right to make revisions without notice to product specifications.
For the most current specification sheet, go to www.kohler.com USA or www.kohler.ca Canada.
11-12-2026 11:18 - US-CA

THE BOLD LOOK OF KOHLER.

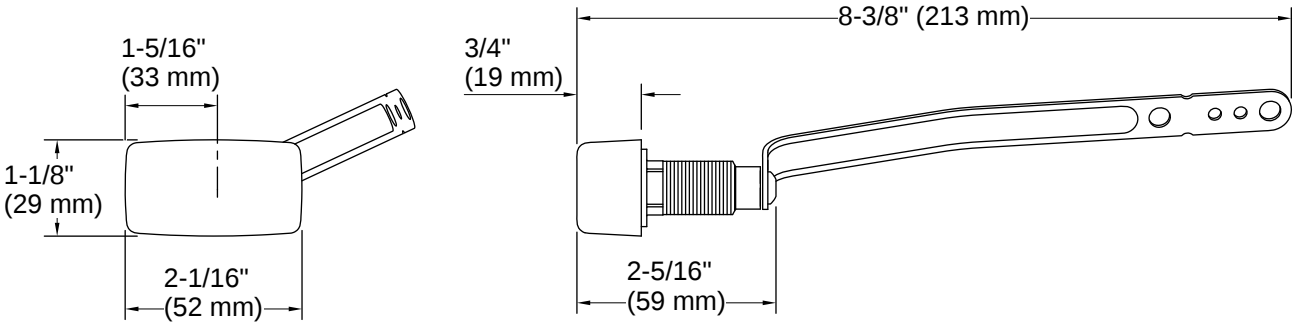

Installation Notes

Install this product according to the installation instructions.

1-800-4KOHLER (1-800-456-4537)
Kohler Co. reserves the right to make revisions without notice to product specifications.
For the most current specification sheet, go to www.kohler.com USA or www.kohler.ca Canada.
11-12-2026 11:18 - US-CA

THE BOLD LOOK OF KOHLER