Revel® | K-40588-6L

44'' – 48'' W x 70'' – 7/16'' H pivot shower door with 1/4''-thick Crystal Clear glass

Features

- Frameless design emphasizes glass and creates a sleek, minimalist look
- Self-closing mechanism offers superior performance and security against water leakage
- Vertical handle complements the contemporary style
- Zero-threshold creates easy entry and exit to the showering space
- CleanCoat®+ glass coating creates a hydrophobic barrier that repels water, soap scum, and residue, saving time and protecting shower doors 10 times longer than original CleanCoat. (Based on 2021 internal wear/abrasion testing using a microfiber cloth.)
- Tempered glass ensures enhanced safety and durability



Available Colors/Finishes

Color tiles intended for reference only.

- SHP Bright Polished Silver
- BL Matte Black
- 2MB Vibrant Brushed Moderne Brass
- BNK Anodized Brushed Nickel

1-800-4KOHLER (1-800-456-4537)
Kohler Co. reserves the right to make revisions without notice to product specifications.
For the most current specification sheet, go to www.kohler.com USA or www.kohler.ca Canada.
11-12-2026 11:26 - US-CA

Codes/Standards

ANSI Z97.1 (Tempered Glass)
CAN/CGSB-12.1
CPSC 16CFR 1201

Technical Information

All product dimensions are nominal.

Base-To-Wall Radius – Maximum:	3/8" (10 mm)
Shower Ledge Minimum Flat:	2-1/2" (64 mm)
Shower Wall Minimum Flat:	2-5/16" (59 mm)
Weight:	105 lbs (47.6 kg)

Material

- Frameless, 1/4" (6 mm) thick Crystal Clear tempered glass
- Anodized aluminum prevents rust and corrosion

Technology

- Maximum width adjustability

Warranty

See website for detailed warranty information.

KOHLER® Bath and Shower Doors Ten-Year Limited Warranty

1-800-4KOHLER (1-800-456-4537)
Kohler Co. reserves the right to make revisions without notice to product specifications.
For the most current specification sheet, go to www.kohler.com USA or www.kohler.ca Canada.
11-12-2026 11:26 - US-CA

THE BOLD LOOK OF KOHLER.

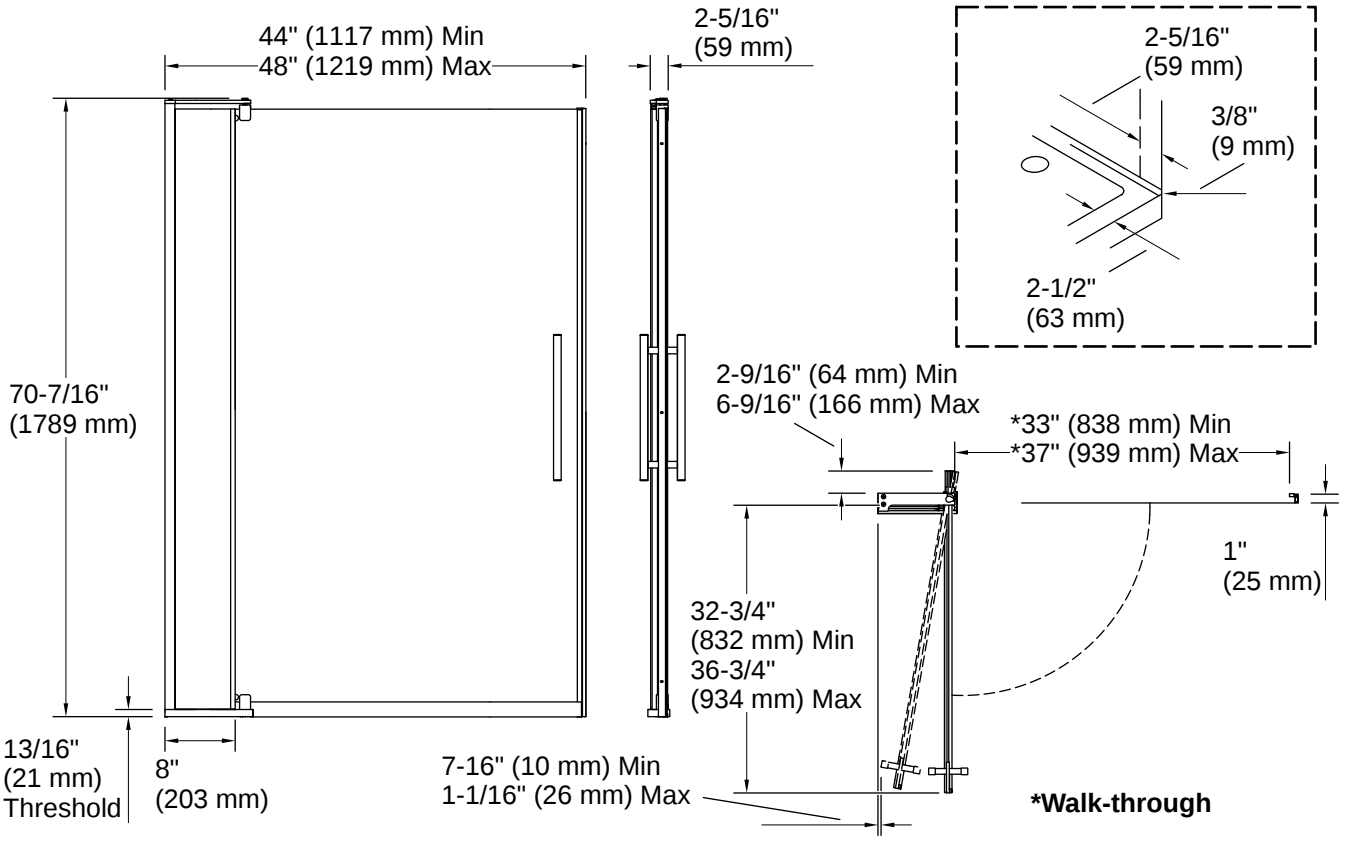

Installation

- Fits opening widths 44" – 48" (1118 –1219 mm)
- 4" (102 mm) width adjustment
- 3/8" (10 mm) out-of-plumb adjustability on each side simplifies installation
- Door can be installed to open to the left or right to suit your bathroom layout
- Pivot shower door
- For residential use only

Installation Notes

Install this product according to the installation instructions.

The vertical opening should be a minimum of 74-3/8" (1889 mm) to allow for installation clearance.

1-800-4KOHLER (1-800-456-4537)
Kohler Co. reserves the right to make revisions without notice to product specifications.
For the most current specification sheet, go to www.kohler.com USA or www.kohler.ca Canada.
11-12-2026 11:26 - US-CA

THE BOLD LOOK OF KOHLER