Memoirs® Stately Fleurette™ by AERIN | K-42584-8

25" rectangular pedestal bathroom sink

Features



- Elegant rectangular basin
- 8" (203 mm) widespread faucet holes
- With overflow
- Decorated with a Delftware pattern
- Coordinates with other products in the Fleurette by AERIN collection

Available Colors/Finishes

Color tiles intended for reference only.

- ARL AERIN Blue
- ARG AERIN Green

1-800-4KOHLER (1-800-456-4537)
Kohler Co. reserves the right to make revisions without notice to product specifications.
For the most current specification sheet, go to www.kohler.com USA or www.kohler.ca Canada.
11-12-2026 20:00 - US-CA

Codes/Standards

ASME A112.19.2/CSA B45.1

Technical Information

Number of Deck Holes:	3
Faucet Hole(s) Size:	1-3/8" (35 mm)
Center(s):	8" (203 mm)
With Overflow:	Yes
Drain Hole Diameter:	1-3/4" (44 mm)
Minimum Base Cabinet Width:	0"
Basin Configuration:	Single Bowl
Basin Length:	15-1/2" (394 mm)
Basin Width:	11-5/8" (295 mm)
Basin Depth:	7" (178 mm)

Material

- Durable high-alumina clay

Included Combo Skus

- K-42585-8 25" rectangular pedestal sink basin
- K-42582 Pedestal

Recommended Products/Accessories

- K-7605-P Pair 3/8" NPT angle supplies with stop, cross handle and annealed vertical tube
- [object Object]23726 Drain treatment
- K-23725 Cast iron cleaner

Warranty

See website for detailed warranty information.

KOHLER® One-Year Limited Warranty

1-800-4KOHLER (1-800-456-4537)
Kohler Co. reserves the right to make revisions without notice to product specifications.
For the most current specification sheet, go to www.kohler.com USA or www.kohler.ca Canada.
11-12-2026 20:00 - US-CA

THE BOLD LOOK OF KOHLER.

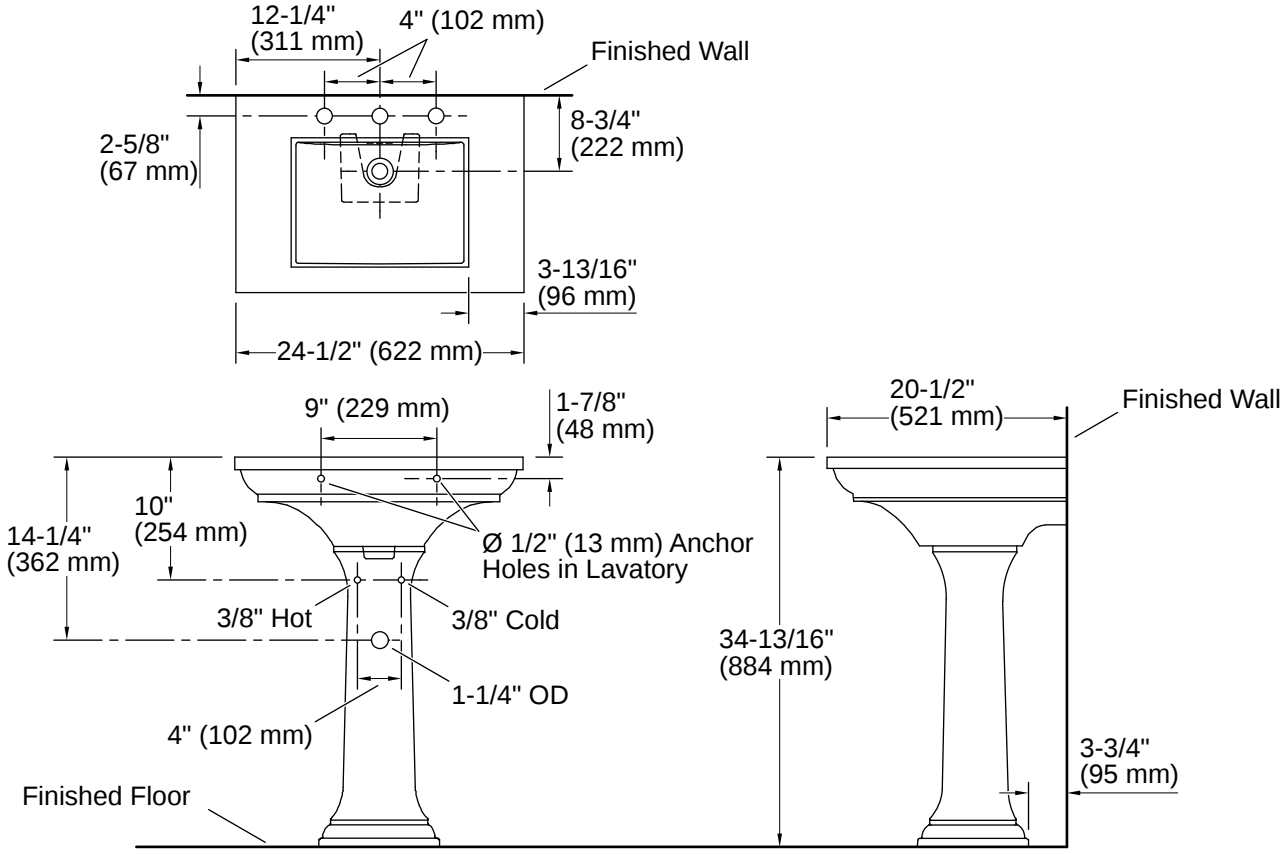

Installation

- Pedestal

Installation Notes

Install this product according to the installation instructions.

1-800-4KOHLER (1-800-456-4537)
Kohler Co. reserves the right to make revisions without notice to product specifications.
For the most current specification sheet, go to www.kohler.com USA or www.kohler.ca Canada.
11-12-2026 20:00 - US-CA

THE BOLD LOOK OF KOHLER.