KOHLER

LAVATORY FAUCET

WAVE
K-45444T-4

Product Specification:

Model	Spout Reach#	Handle	Includes	Finish
K-45444T-4	146mm	Lever	Spout, valve, handle, aerator, drain, water inlet hose and connection kit	Polished Chrome (-CP)

#Reach: the distance between the spout and center of the faucet opening hole

Product Dimension:

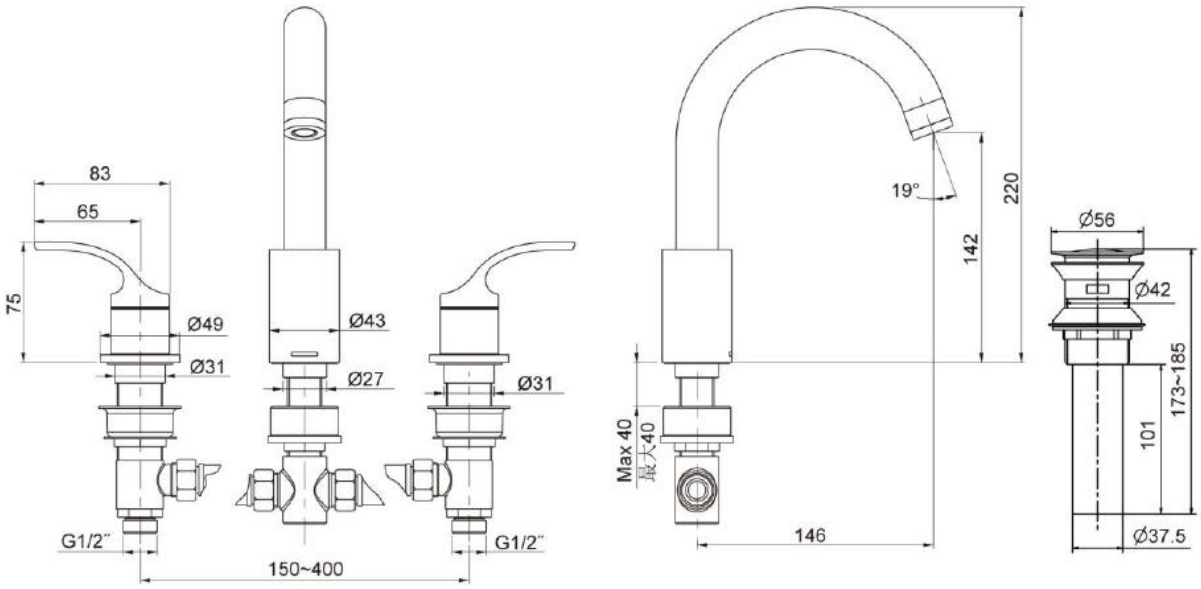

K-45444T-4

Please note that the above information are subject to change without notice.