Kingston™ Ultra | K-84325-TA

Wall-mount toilet bowl with top spud

Features

- Elongated bowl offers added room and comfort
- Optimized siphonic flush action maximizes bulk waste removal
- 1.0 gpf (3.8 lpf), 1.1 gpf (4.2 lpf), 1.28 (4.8 lpf), or 1.6 gpf (6.0 lpf) depending on flushometer specified
- 11" x 8-1/4" (279 mm x 210 mm) water surface
- Wall-mounted vitreous china water closet bowls withstand a vertical force up to 1,000 lbs
- 1-1/2" (38 mm) top spud
- Trade Agreement Act (TAA) compliant



Sustainability

Available Colors/Finishes

Color tiles intended for reference only.

0 White

1-800-4KOHLER (1-800-456-4537)
Kohler Co. reserves the right to make revisions without notice to product specifications.
For the most current specification sheet, go to www.kohler.com USA or www.kohler.ca Canada.
10-09-2026 01:24 - US-CA

Codes/Standards

For ADA compliance, the rear grab bar may need to be shifted or split.
ADA, OBC, CSA B651 compliant when installed to the specific requirements of these regulations.
Accessibility standards may require controls to be located on the open side of the toilet.
This product should be used with a WaterSense labeled counterpart with the same rated flush volume to ensure the complete system meets the requirements of this specification for water efficiency and performance.

ADA CSA B651 OBC

ASME A112.19.2/CSA B45.1
DOE - Energy Policy Act 1992
EPA WaterSense®
California Energy Commission (CEC)
ADA
ICC/ANSI A117.1
CSA B651
OBC

Technical Information

Installation Type:	Wall-hung
Rough-in:	5"
Flush Type:	Siphon
Flush Rate:	1.0, 1.1, 1.28, or 1.6 gpf (3.8, 4.2, 4.8, or 6.0 lpf)
Bowl Shape:	Elongated
Seat-Mounting Holes:	5-1/2" (140 mm)
Waste Outlet:	Wall
Trapway Size:	2-1/8" (54 mm)
Trapway Type:	Concealed
Water Surface Size:	11" x 8-5/16" (279 mm x 211 mm)
Rim to Water Surface:	5-7/8" (149 mm)

Pressure/Fixture Supply Requirements

Minimum Flowing Pressure:	25 psi (172.4 kPa)
Minimum Flow Rate:	25 gpm (94.6 l/min)

Material

- Vitreous china

Optional Products/Accessories

- K-4731-C Elongated toilet seat with integrated handle and check hinge

Technology

- Improved flush for toilet seat cover removal
- Re-engineered for strong flush performance in buildings with lower water pressure or flow
- Cast-on putty plate resists breakage
- New design eliminates gas leaks, splashing and paper shredding

Warranty

See website for detailed warranty information.

KOHLER® One-Year Limited Warranty

1-800-4KOHLER (1-800-456-4537)
Kohler Co. reserves the right to make revisions without notice to product specifications.
For the most current specification sheet, go to www.kohler.com USA or www.kohler.ca Canada.
10-09-2026 01:24 - US-CA

THE BOLD LOOK OF KOHLER.

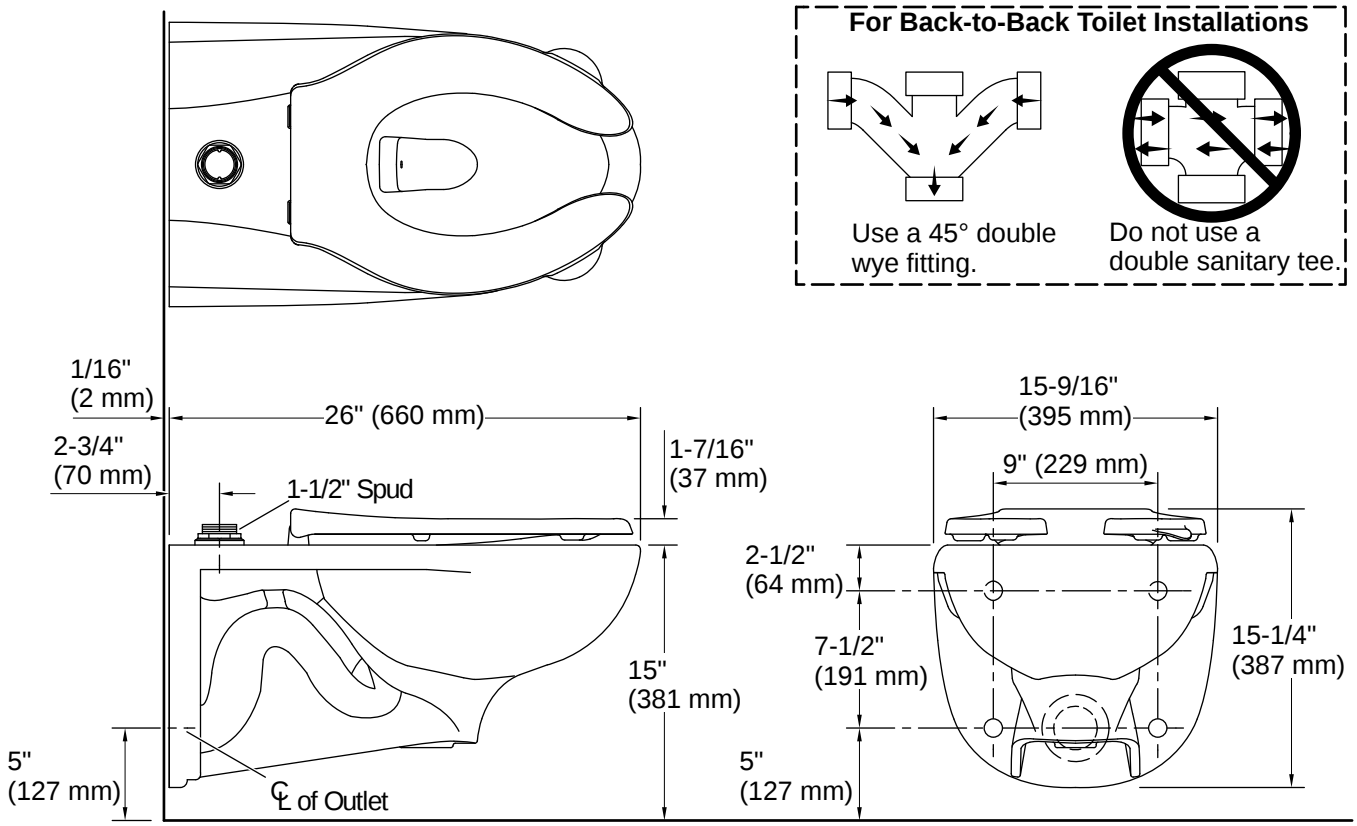

Installation

- Wall-mount
- This product replaces K-4325 and K-84325
- This product is not designed or intended for bariatric use

Installation Notes

Install this product according to the installation instructions.

Product dimensions are nominal and may vary per ASME A112.19.2 tolerances.
This product should be used with a WaterSense labeled counterpart with the same rated flush volume to ensure the complete system meets the requirements of this specification for water efficiency and performance.
ADA, OBC, CSA B651 compliant when installed to the specific requirements of these regulations.
Plumbing codes may require elongated toilets and elongated, open-front seats in public bathrooms.
Accessibility standards may require controls to be located on the open side of the toilet.

1-800-4KOHLER (1-800-456-4537)
Kohler Co. reserves the right to make revisions without notice to product specifications.
For the most current specification sheet, go to www.kohler.com USA or www.kohler.ca Canada.
10-09-2026 01:24 - US-CA

THE BOLD LOOK OF KOHLER.