Numista® | K-R26586-4G

Rite-Temp® pressure-balancing bath and shower faucet set

Features

- Advanced spray engine provides three alternative experiences: wide coverage, intense drenching, and powerful massage
- Powerful massage spray is a focused stream that targets sore muscles, or use as a utility spray to rinse kids, pets, and your shower
- Intense drenching spray delivers a forceful spray ideal for rinsing shampoo from hair
- Wide coverage spray produces an encompassing spray for everyday use
- MasterClean™ sprayface features an easy-to-clean surface that withstands mineral buildup and maximizes spray performance
- Single lever handle allows for both on/off activation and temperature setting
- KOHLER® ceramic disc valves exceed industry longevity standards for a lifetime of durable performance
- 1.75 gpm (6.6 lpm) maximum flow rate at 45 psi (3.1 bar)
- Box includes: Showerhead, shower arm and flange, faceplate with lever handle, diverter spout with 1/2" NPT or slip-fit connection, and Rite-Temp® pressure-balancing valve with universal 1/2" NPT male connections
- This product can help a building earn Water Efficiency points in LEED® Green Building Rating System



Sustainability

WATER-SAVING DESIGN

Available Colors/Finishes

Color tiles intended for reference only.

	CP	Polished Chrome
	BN	Vibrant Brushed Nickel
	BL	Matte Black
	2MB	Vibrant Brushed Moderne Brass

1-800-4KOHLER (1-800-456-4537)
Kohler Co. reserves the right to make revisions without notice to product specifications.
For the most current specification sheet, go to www.kohler.com USA or www.kohler.ca Canada.
10-24-2026 18:05 - US-CA

THE BOLD LOOK OF KOHLER®

Codes/Standards

ASME A112.18.1/CSA B125.1
DOE - Energy Policy Act 1992
EPA WaterSense®
California Energy Commission (CEC)

Technical Information

All product dimensions are nominal.

Handle

Handle Style/Type:	Lever

Spout

Spout Reach:	6-3/8" (162 mm)

Flow Rate

Shower/Rainhead Rated Maximum Flow:	1.75 gpm (6.6 l/min)

Valves

Included Valve:	Pressure Balance

Material

- Premium material construction for durability and reliability
- Select KOHLER finishes feature ScratchShield® technology which withstands even the toughest daily use
- Spot Repel® finish resists fingerprints, smudges, and water spots (Matte Black finish only)

Recommended Products/Accessories

- [object Object]23726 Drain treatment
- K-23723 Faucet cleaner

Technology

- Rite-Temp® technology automatically maintains water temperature within +/- 3°F for anti-scalding protection and precise control

Warranty

See website for detailed warranty information.

KOHLER® Faucet Lifetime Limited Warranty

1-800-4KOHLER (1-800-456-4537)
Kohler Co. reserves the right to make revisions without notice to product specifications.
For the most current specification sheet, go to www.kohler.com USA or www.kohler.ca Canada.
10-24-2026 18:05 - US-CA

THE BOLD LOOK OF KOHLER.

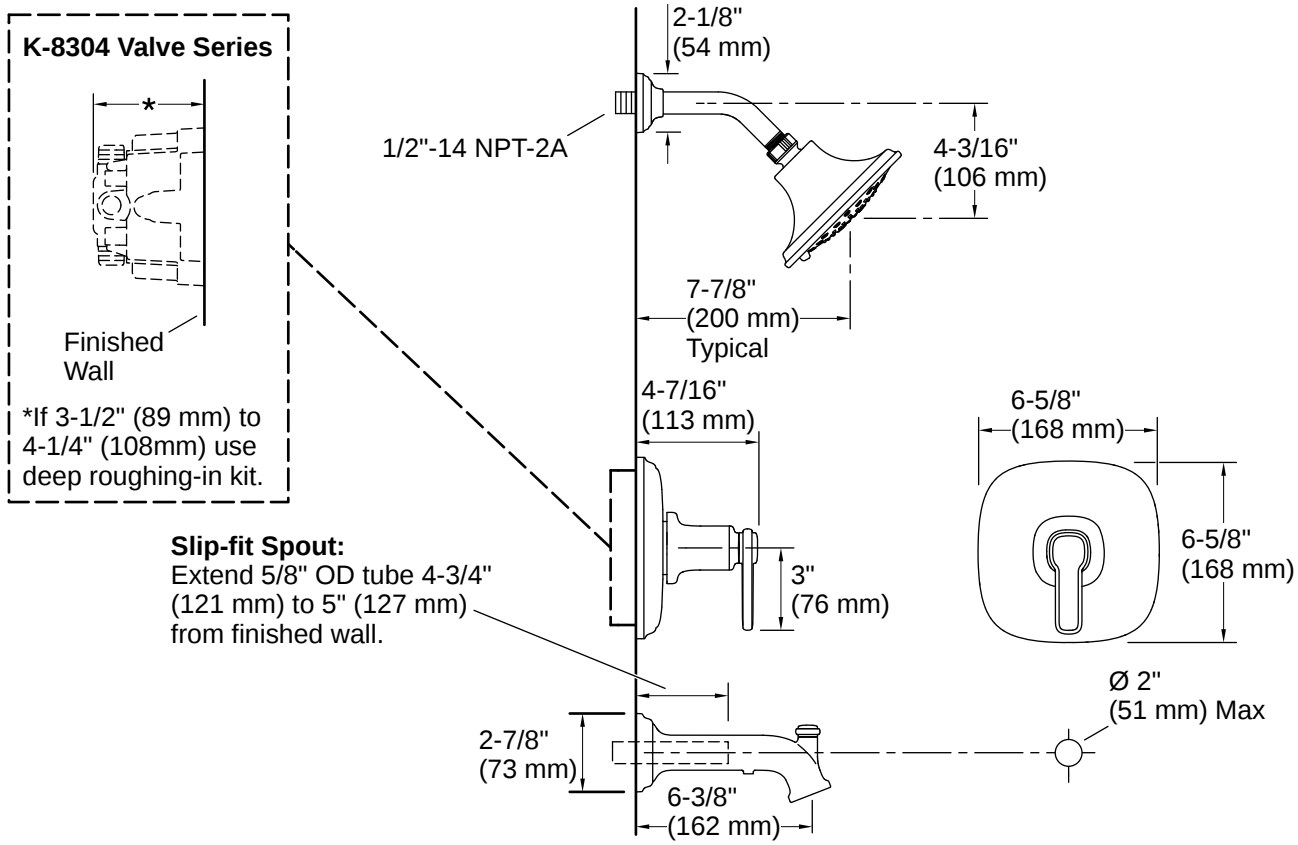

Installation Notes

Install this product according to the installation instructions.

1-800-4KOHLER (1-800-456-4537)
Kohler Co. reserves the right to make revisions without notice to product specifications.
For the most current specification sheet, go to www.kohler.com USA or www.kohler.ca Canada.
10-24-2026 18:05 - US-CA

THE BOLD LOOK OF KOHLER