Windet® | K-R27971-G

3-in-1 combo shower kit with shower rail, 1.75 gpm

Features

- Showerhead can also be used as a rainhead for a customized showering experience
- Magnetic rail allows handshower to easily dock at any height
- Can be used as a showerhead/rainhead or a handshower with a simple push of a button
- Advanced spray engine provides three spray experiences: full coverage, silk, powerful massage, plus pause feature
- Full coverage spray produces an encompassing spray ideal for everyday use
- Silk spray releases a dense, luxurious spray ideal for rinsing
- Powerful massage spray is a focused stream that targets sore muscles, or use as a utility spray to rinse kids, pets, and your shower
- Pause feature temporarily pauses water flow to conserve water while you lather, shave, or shampoo
- Simple thumb tab smoothly transitions between sprays
- Diverter positioned at the base of the column allows user to easily switch flow between handshower and rainhead
- 1.75 gpm (6.6 lpm) rainhead and handshower flow rates
- MasterClean™ sprayface features an easy-to-clean surface that withstands mineral buildup and maximizes spray performance
- Box Includes: Showerhead, handshower, shower rail, 60" (1524 mm) hose, mounting hardware

Sustainability

WATER-SAVING DESIGN

Available Colors/Finishes

Color tiles intended for reference only.

	CP	Polished Chrome
	BN	Vibrant Brushed Nickel
	BL	Matte Black

1-800-4KOHLER (1-800-456-4537)
Kohler Co. reserves the right to make revisions without notice to product specifications.
For the most current specification sheet, go to www.kohler.com USA or www.kohler.ca Canada.
10-27-2026 07:02 - US-CA

THE BOLD LOOK OF KOHLER

Codes/Standards

ASME A112.18.1/CSA B125.1
DOE - Energy Policy Act 1992
EPA WaterSense®
California Energy Commission (CEC)

Technical Information

All product dimensions are nominal.

Flow Rate

Shower/Rainhead Rated Maximum Flow:	1.75 gpm (6.6 l/min)
Handshower Rated Maximum Flow:	1.75 gpm (6.6 l/min)

Material

- Select KOHLER finishes feature ScratchShield® technology which withstands even the toughest daily use
- KOHLER finishes resist corrosion and tarnishing

Warranty

See website for detailed warranty information.

KOHLER® Faucet Lifetime Limited Warranty

1-800-4KOHLER (1-800-456-4537)
Kohler Co. reserves the right to make revisions without notice to product specifications.
For the most current specification sheet, go to www.kohler.com USA or www.kohler.ca Canada.
10-27-2026 07:02 - US-CA

THE BOLD LOOK OF KOHLER

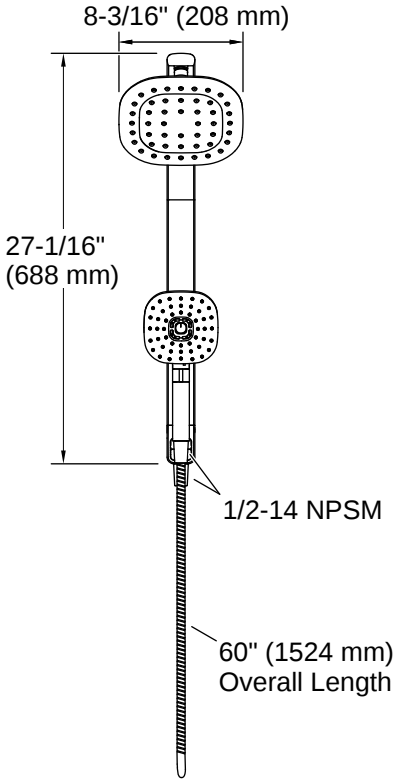

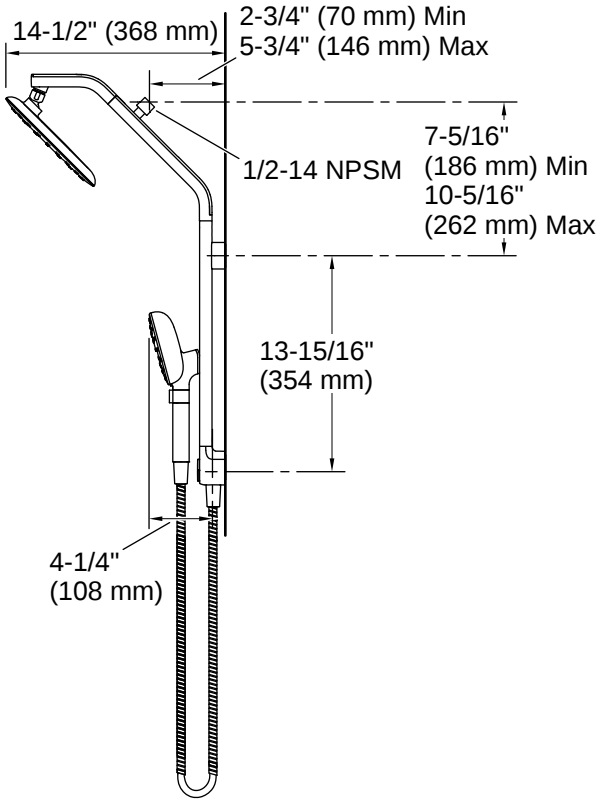

Installation

- G 1/2" - 14 connection
- Required for installation: Adjustable wrench, Phillips screwdriver, sealant tape

Installation Notes

Install this product according to the installation instructions.

For use with automatic compensating valves rated at 1.45 gal/min (5.5 l/min) or less.

1-800-4KOHLER (1-800-456-4537)
Kohler Co. reserves the right to make revisions without notice to product specifications.
For the most current specification sheet, go to www.kohler.com USA or www.kohler.ca Canada.
10-27-2026 07:02 - US-CA
THE BOLD LOOK OF KOHLER