KOHLER. Faucets

Spacity™

Two-function pet shower with soap dispenser, 9.5 lpm

K-R33033T

Features

- Multifunction handheld pet shower offers two spray experiences: Cloud for a silky mist of water droplets and Ribbon for a waterfall-like stream
- Integrated refillable soap dispenser to keep your hands free; holds up to 1.35 oz (40 mL)
- Attached cap keeps soap reservoir plug within reach while refilling
- Pause button temporarily shuts off water flow
- Soft silicone bristles offer gentle deep cleaning
- Optimized sprayface for maximum performance
- Filter reduces chlorine and odor and controls scale for gentleness on hair, skin, and other surfaces
- 2.5 gpm (9.5 lpm) maximum flow rate at 80 psi (5.5 bar)
- Requires hose and wall-mount holder (sold separately)

Material

- Premium material construction for durability and reliability
- KOHLER finishes resist corrosion and tarnishing

Installation

- G 1/2 connection

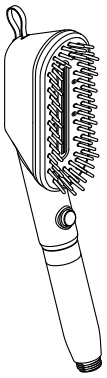

Codes/Standards

Plumbing Standards
GB/T 23447

See website for detailed warranty information.

KOHLER Faucets

Spacity™

Two-function pet shower with soap dispenser, 9.5 lpm

K-R33033T

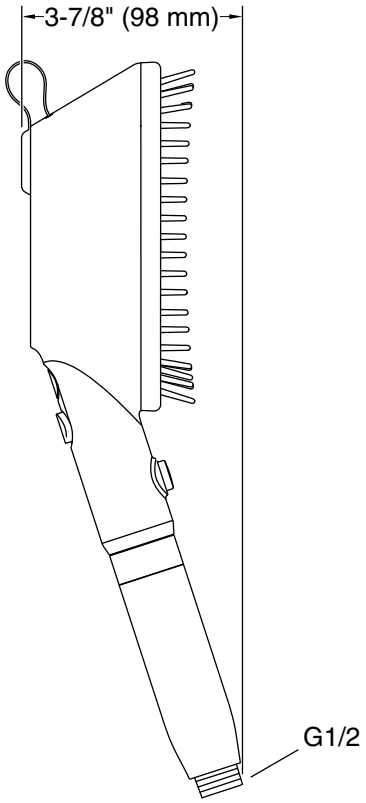

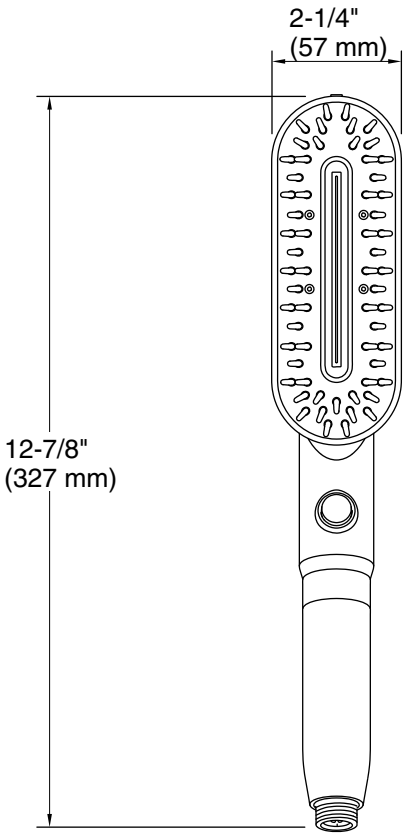

Technical Information

All product dimensions are nominal.

Handshower rated max flow:	2.5 gal/min (9.5 l/min)

Notes

Install this product according to the installation instructions.