robern

Craft Series Vanity
CVWY72 Wyndale Vanity Specification Sheet

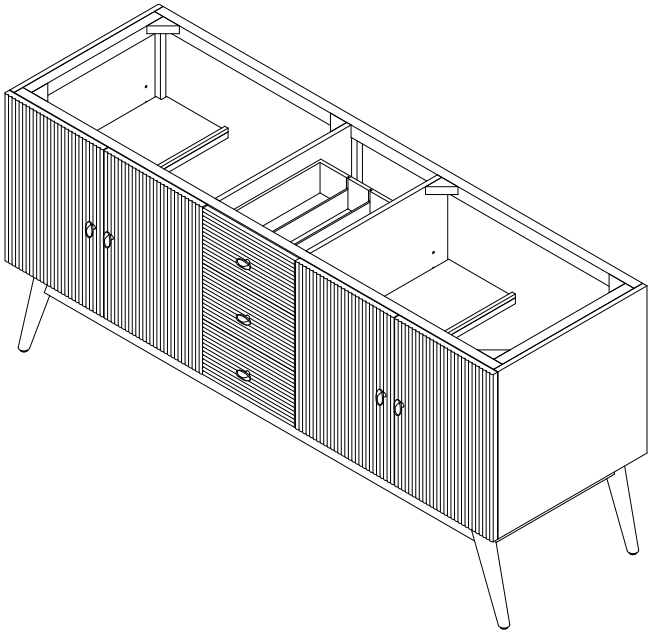

FEATURES

- Ribbed detailing on doors and drawer fronts
- Mid-Century inspired tapered legs
- Distinctive floating vanity detail
- Center drawers are full drawers
- Removable glass drawer dividers included

MATERIALS & CONSTRUCTION

- Solid wood and veneer construction
- Full plywood back panel, no cutout
- Stainless Steel knobs
- Dovetailed drawers
- Blum full extension slow close drawer slides
- Adjustable Blum 95° soft-close hinges
- Durable, moisture resistant polyurethane finish
- Adjustable leveling feet

OPTIONS

- Available in:
  - CVWY7220787 - Honey Oak with Aged Brass
  - CVWY7221269 - Dark Burnt Oak with Brushed Pewter
- Engineered stone tops available:
  - TA72UDO93-8WD1, White Zeus Extreme
  - TA72UDO95-8WD1, Eternal Marquina
  - TA72UDO96-8WD1, Pietra
  - TA72UDO97-8WD1, Calypso
  - TA72UDO98-8WD1, Eternal Serena
  - TA72UDO100-8WD1, Eternal Calacatta Gold
- Coordinating Ann Sacks Stone Tops and Kallista Sink:
  - AS18963, Carrara Marble
  - AS18964, Calacatta Marble
  - P74235-WO-0, Perfect Centric Rectangle

DIMENSIONS

- Width: 71” (1803 mm)
- Height: 33-3/16” (843 mm)
- Depth: 22-1/2” (571 mm)

MODEL NUMBER KEY

PRODUCT LINE	CATEGORY	COLLECTION	WIDTH	FINISH OPTIONS
C = Craft Series	V = Vanity	WY = Wyndale	72	(See above)

MORE INFORMATION

Scan the QR code to see the details found in the Craft Vanity installation instructions.

Use the camera app on your mobile device to look at this QR code. This will allow you to quickly access web pages and other relevant documents.

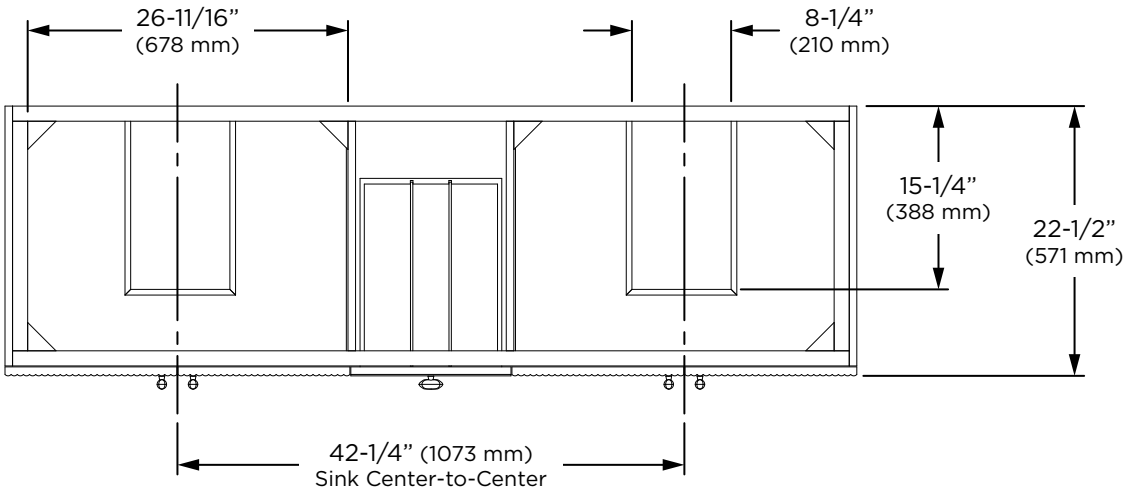

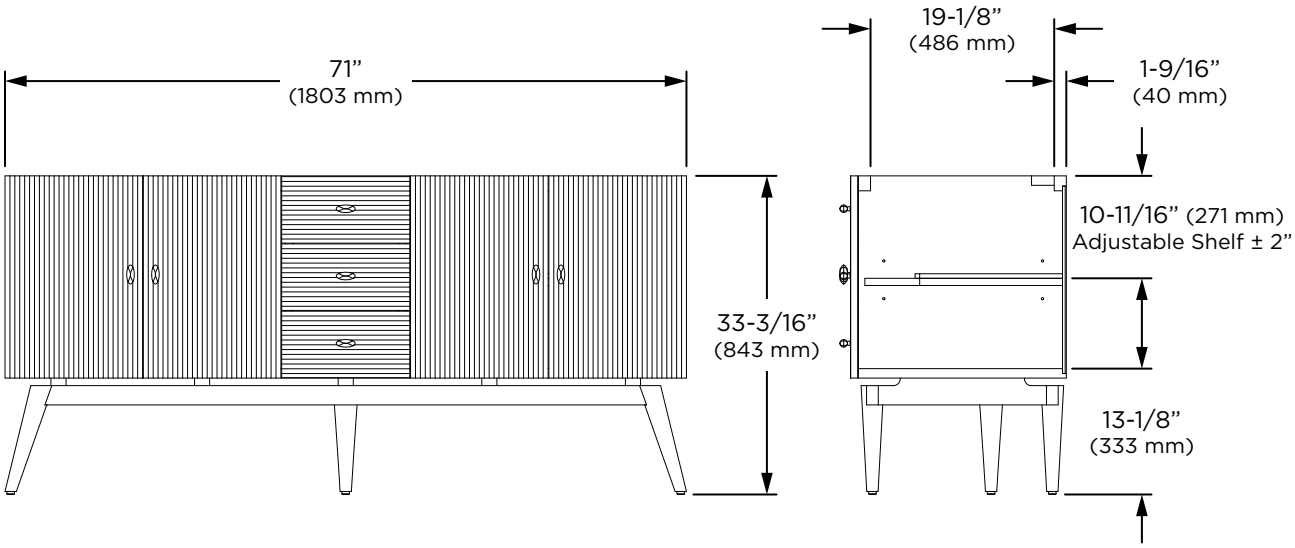

robern